Blue rectangles are links to other catalog pages.

PD16-S67C Piloted 4-Way Spool-Type Valve

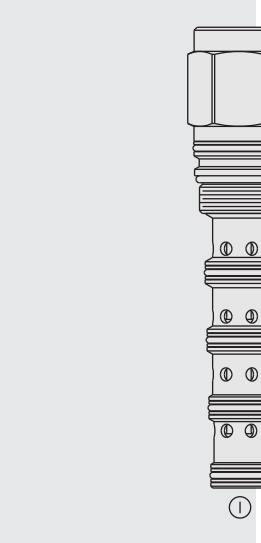

DESCRIPTION

A screw-in, cartridge-style, pilot-operated, spool-type, hydraulic directional valve.

OPERATION

When the **PD16-S67C** is in neutral position, all ports are blocked. On remote pilot signal at ①, the valve shifts to allow flow between ③ and ④, and between ② and ⑤. On remote pilot signal at ⑥, the valve shifts to allow flow between ③ and ②, and between ④ and ⑤.

FEATURES

- Hardened spool and cage for long life.
- 110 and 170 psi bias springs available.

RATINGS

Operating Pressure: 240 bar (3500 psi)

Flow: 0–94.6 lpm (0–25 gpm); See Performance Chart

Maximum Internal Leakage: at 207 bar (3000 psi): 164 ml/minute (10 cu. in./minute)

Temperature: -40 to 120°C

Filtration: See page 9.010.1

Fluids: Mineral-based or synthetics with lubricating properties at viscosities of 7.4 to 420 cSt (50 to 2000 sus); See Temperature and Oil Viscosity, page 9.060.1

Installation: No restrictions; See page 9.020.1

Cavity: VC16-S6; See page 9.116.1

Cavity Tool: CT16-S6XX; See page 8.600.1

Seal Kit: SK16-S6X-BMMMM; See page 8.650.1

SYMBOL

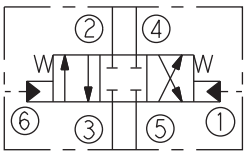

PERFORMANCE (Cartridge Only)

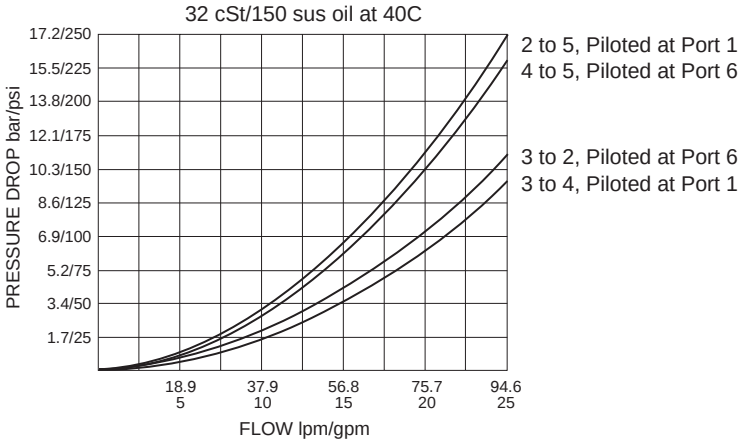

DIMENSIONS

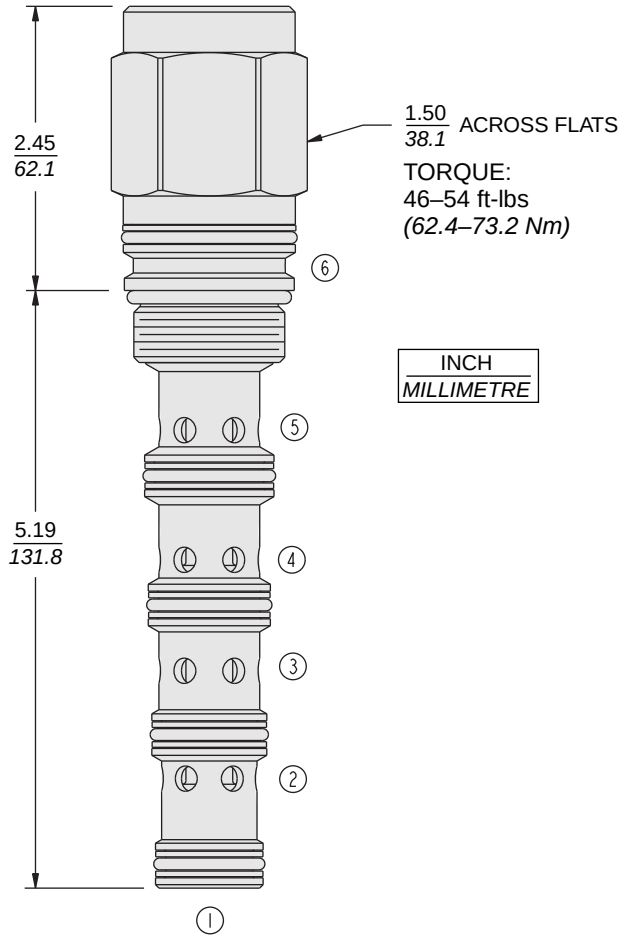

MATERIALS

Cartridge: Weight: 0.85 kg. (1.88 lbs.) Steel with hardened work surfaces. Zinc-plated exposed surfaces. Buna N O-rings and polyester elastomer back-ups standard.

Ported Body: Consult factory.

TO ORDER

PD16-S67C - ___ - ___ - ___

Porting
Cartridge Only **0**

Bias Spring†
110 7.6 bar (110 psi)
170 11.7 bar (170 psi)
Optional bias springs considered on OEM request.

Seals
N Buna N (Std.)
V Fluorocarbon
P Polyurethane