Overview

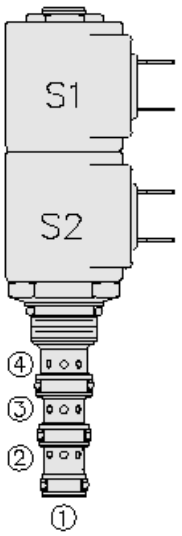

Symbol

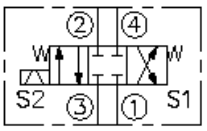

Description

A solenoid-operated, 4-port, 3-position, direct acting spool type screw-in hydraulic cartridge valve. When de-energized, the SV08-47CX blocks all ports. When coil 1 is energized, flow is allowed from 3 to 4, and from 2 to 1. When coil 2 is energized, flow is allowed from 3 to 2, and from 4 to 1. In circuits where work port flows are unequal due to cylinder ratios, the higher return flow should be directed to port 2.

Features

- Continuous-duty rated solenoid.
- Hardened precision spool and cage for long life.
- Optional coil voltages and terminations.
- Manual override option.
- Optional waterproof E-Coils rated up to IP69K.
- Efficient wet-armature construction.
- All ports may be fully pressurized.
- Cartridges are voltage interchangeable.
- Unitized, molded coil design.
- Industry-common cavity
- Compact size.

Ratings

Pressure Ratings

Pressure rating	240 bar (3500 psi)
Proof pressure	344 bar (5000 psi)
Burst pressure	779 bar (11300 psi)

Flow Ratings

Flow rating	See "performance range"	
Maximum internal leakage	164 ml/min (10 in³/min)	**- Note:** At 207 bar (3000 psi)

Temperature Ratings

Operating fluid temperature	-40 to 100 °C (-40 to 212 °F)	**- Note:** With buna N seals
	-26 to 204 °C (-15 to 400 °F)	**- Note:** With fluorocarbon seals
	-54 to 107 °C (-65 to 225 °F)	**- Note:** With polyurethane seals
Storage temperature	-40 to 70 °C (-40 to 160 °F)	
Ambient temperature	-40 to 70 °C (-40 to 160 °F)	

Operating Parameters

Fluids	Mineral based or synthetic hydraulic fluid with lubricating properties
Fluid viscosity range	7.4 to 420 cSt
Maximum operating contamination level	20/18/14 per ISO 4406

Properties

Unit weight	0.157 kg (0.346 lb)
Internal wetted surface area	159 cm² (24.7 in²)

Performance

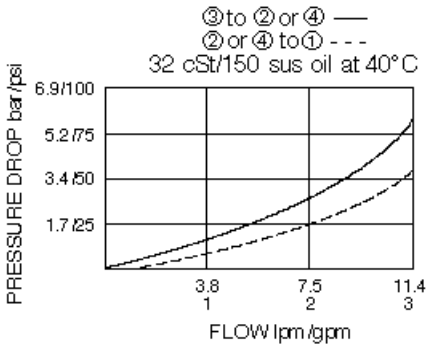

Dimensions

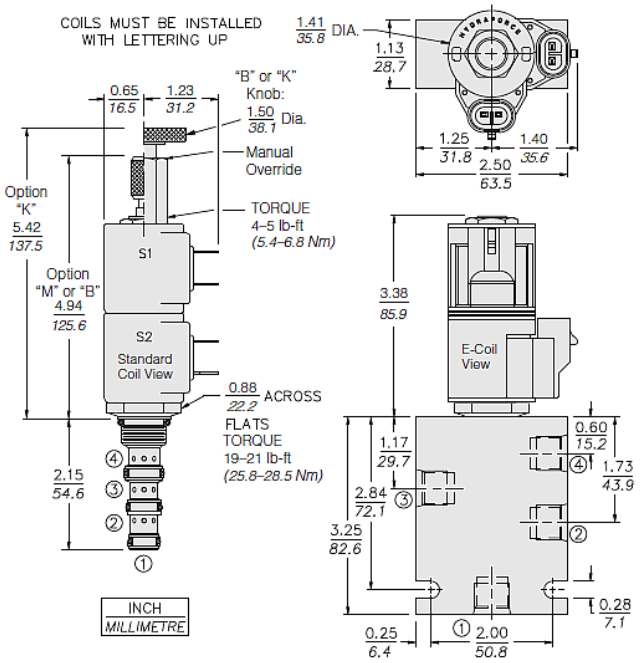

Installation Specifications

Cavity	VC08-4
Cartridge installation torque	25.8 to 28.5 N-m (19 to 21 ft-lb)
Maximum allowable torque	54.2 N-m (40 ft-lb) **- Note:** In aluminum
Coil nut torque	5.4 to 6.8 N-m (4 to 5 ft-lb)
Orientation restriction	None

Accessories

Seal kit	SK08-4X-MMM **- Note:** X = seal option

Order Code

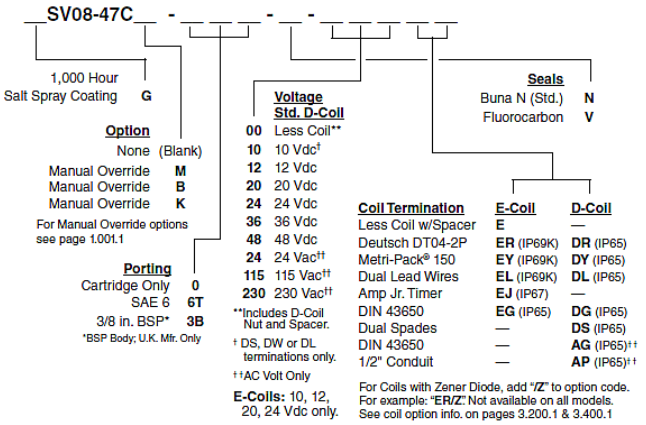

Model Options

SV08-47CE-H-J-L

E Manual Override

CODE	DESCRIPTION
BLANK	NONE

H Line Body

CODE	DESCRIPTION
0	No Body
6T	Aluminum SAE 6
6TD	Ductile Iron SAE 6
3B	Aluminum BSPP 3/8" (3)
3BD	Ductile Iron BSPP 3/8" (3)

J Seal

CODE	DESCRIPTION
N	Buna-N
V	Fluorocarbon
P	Polyurethane
U	PPDI Urethane

L Coil

CODE	DESCRIPTION
0	No Coil, D-Coil Spacer
0E	No Coil, E-Coil Spacer
10DL	10 VDC, D-Coil, Dual Lead Wires
10DR/D	10 VDC, D-Coil, Deutsch with Diode
10DS	10 VDC, D-Coil, Dual Spade
10EL	10 VDC, E-Coil, Dual Lead Wires, 18 inches long
10EL/36	10 VDC, E-Coil, Dual Lead Wires, 36 inches long
10ER	10 VDC, E-Coil, Deutsch
10ER/Z	10 VDC, E-Coil, Deutsch with Zener Diode
12DG	12 VDC, D-Coil, DIN 43650
12DL	12 VDC, D-Coil, Dual Lead Wires, 18 inches long
12DL/36	12 VDC, D-Coil, Dual Lead Wires, 36 inches long
12DL/W	12 VDC, D-Coil, Dual Lead Wires with Weatherpak

CODE	DESCRIPTION
12DL/W/D	12 VDC, D-Coil, Dual Lead Wires with Weatherpak with Diode
12DR	12 VDC, D-Coil, Deutsch
12DR/D	12 VDC, D-Coil, Deutsch with Diode
12DR/Z	12 VDC, D-Coil, Deutsch with Zener Diode
12DS	12 VDC, D-Coil, Dual Spade
12EG	12 VDC, E-Coil, DIN 43650
12EG/Z	12 VDC, E-Coil, DIN 43650 with Zener Diode
12EJ	12 VDC, E-Coil, AMP Jr.
12EJ/Z	12 VDC, E-Coil, AMP Jr. with Zener Diode
12EL	12 VDC, E-Coil, Dual Lead Wires, 18 inches long
12EL/36	12 VDC, E-Coil, Dual Lead Wires, 36 inches long
12EL/Z	12 VDC, E-Coil, Dual Lead Wires with Zener Diode
12ER	12 VDC, E-Coil, Deutsch
12ER/Z	12 VDC, E-Coil, Deutsch with Zener Diode
12EY	12 VDC, E-Coil, Metri-Pack 150
12EY/Z	12 VDC, E-Coil, Metri-Pack 150 with Zener Diode
20DG	20 VDC, D-Coil, DIN 43650
20DS	20 VDC, D-Coil, Dual Spade
20ER	20 VDC, E-Coil, Deutsch
20ER/Z	20 VDC, E-Coil, Deutsch with Zener Diode
24AG	24 VDC, D-Coil, DIN 43650
24AP	24 VDC, D-Coil, 1/2" Conduit and Dual Lead Wires
24DG	24 VDC, D-Coil, DIN 43650
24DL	24 VDC, D-Coil, Dual Lead Wires, 18 inches long
24DL/36	24 VDC, D-Coil, Dual Lead Wires, 36 inches long
24DL/W	24 VDC, D-Coil, Dual Lead Wires with Weatherpak
24DR	24 VDC, D-Coil, Deutsch
24DR/D	24 VDC, D-Coil, Deutsch with Diode
24DR/Z	24 VDC, D-Coil, Deutsch with Zener Diode
24DS	24 VDC, D-Coil, Dual Spade
24EG	24 VDC, E-Coil, DIN 43650
24EG/Z	24 VDC, E-Coil, DIN 43650 with Zener Diode
24EJ	24 VDC, E-Coil, AMP Jr.
24EL/D	24 VDC, E-Coil, Dual Lead Wires with Diode
24ER	24 VDC, E-Coil, Deutsch
24ER/Z	24 VDC, E-Coil, Deutsch with Zener Diode
24EY	24 VDC, E-Coil, Metri-Pack 150
24EY/Z	24 VDC, E-Coil, Metri-Pack 150 with Zener Diode
36DG	36 VDC, D-Coil, DIN 43650
36DS	36 VDC, D-Coil, Dual Spade
115AG	115 VAC, D-Coil, DIN 43650
115AP	115 VAC, D-Coil, 1/2" Conduit and Dual Lead Wires
230AG	230 VAC, D-Coil, DIN 43650

CODE	DESCRIPTION
230AP	230 VAC, D-Coil, 1/2" Conduit and Dual Lead Wires