FLOW CONTROL VALVE

Overview

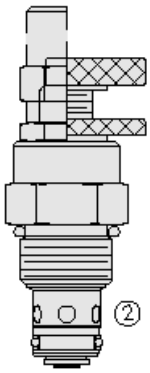

SYMBOL

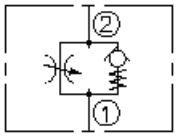

Description

A screw-in, cartridge style, variable orifice, hydraulic flow control valve with reverse flow check.

Operation

The FC10-21 valve increases its orifice value from fully closed to fully open with clockwise adjustment rotation.

Features

- Adjustments cannot be backed out of the valve.
- Desired settings may be locked down.
- Hardened parts for long life.
- Aluminum knob option.
- Positive shut-off.
- Linear adjustment.
- Industry-common cavity.

Ratings

Pressure Ratings

Pressure rating: 241 bar (3500 psi)
Proof pressure: 345 bar (5000 psi)
Burst pressure: 896 bar (13000 psi)

Flow Ratings

Flow rating: 57 lpm (15 gpm)
Maximum internal leakage: 0.5 ml/min (10 drops/min)

Temperature Ratings

Operating fluid temperature: -40 to 100 °C (-40 to 212 °F) note: With buna N seals
-26 to 204 °C (-15 to 400 °F) note: With fluorocarbon seals
-54 to 107 °C (-65 to 225 °F) note: With polyurethane seals
Storage temperature: -40 to 70 °C (-40 to 160 °F)
Ambient temperature: -40 to 70 °C (-40 to 160 °F)

Operating Parameters

Fluids: Mineral based or synthetic hydraulic fluid with lubricating properties
Fluid viscosity range: 7.4 to 420 cSt
Maximum operating contamination level: 18/16/13 per ISO 4406

Properties

Adjustment torque: 0.34 N-m (3 in-lb) note: At 7 bar (100 psi)
4.52 N-m (40 in-lb) note: At 207 bar (3000 psi)
Unit weight: 0.16 kg (0.35 lb)

FLOW CONTROL VALVE

Internal wetted surface area: 95.8 cm^2 (14.85 in^2)

Performance

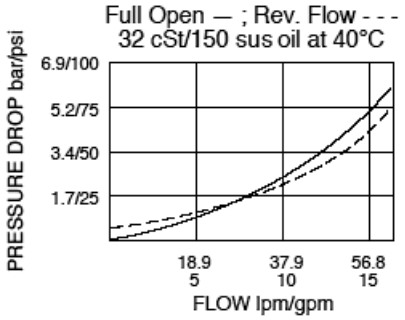

Dimensions

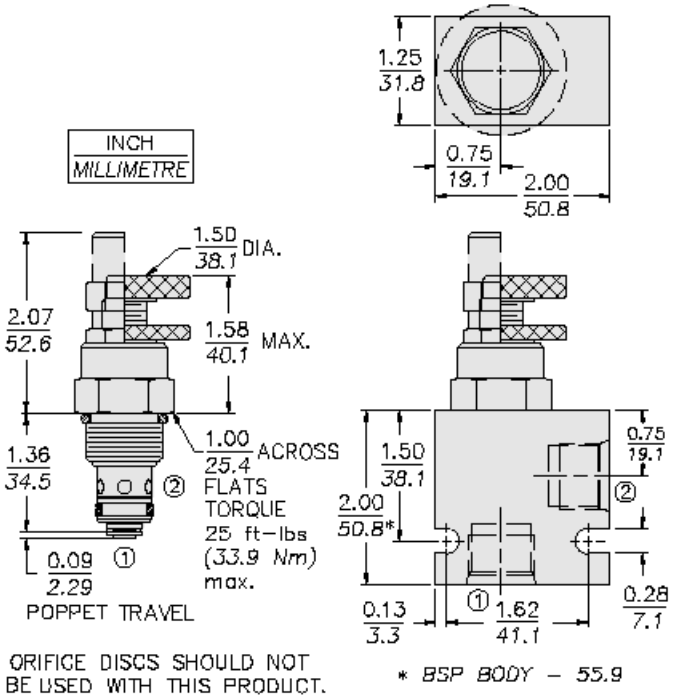

Installation Specifications

Cavity: VC10-2A

10-size-2-way Cavities

Cartridge installation torque: 33 to 35 N-m (24 to 26 ft-lb)

Orientation restriction: None

Accessories

Seal kit: SK10-2X-M

Seal kit installation instructions

Housings: Available 10-2w valve bodies

FLOW CONTROL VALVE

Order Code

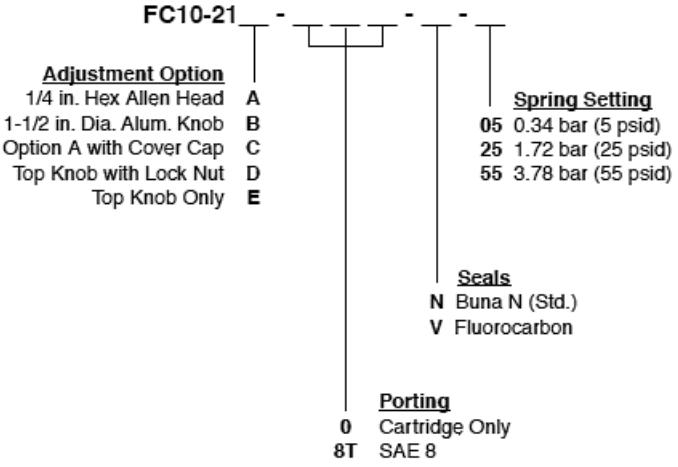

Model Options

FC10-21F-H-J-R

F Adjustment Option

CODE	DESCRIPTION
A	1/4" Hex Allen Head
B	1-1/2" Diameter Aluminum Knob with Aluminum Lock Knob
C	1/4" Hex Allen Head with Cover Cap
D	1-1/2" Diameter Aluminum Knob with Lock Nut
E	1-1/2" Diameter Aluminum Knob Only

H Line Body

CODE	DESCRIPTION
0	No Body
6T	Aluminum SAE 6
8T	Aluminum SAE 8
6TD	Ductile Iron SAE 6
8TD	Ductile Iron SAE 8
2B	Aluminum BSPP 1/4" (2)
3B	Aluminum BSPP 3/8" (3)
4B	Aluminum BSPP 1/2" (4)
4BD	Ductile Iron BSPP 1/2" (4)

J Seal

CODE	DESCRIPTION
N	Buna-N
V	Fluorocarbon
P	Polyurethane
U	PPDI Urethane

R Spring Options

CODE	DESCRIPTION
05	5 psi
25	25 psi
55	55 psi