NEEDLE VALVE

Overview

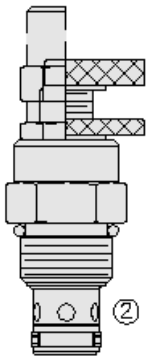

SYMBOL

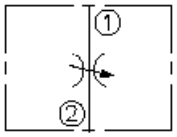

Description

A screw-in, cartridge style, variable orifice, hydraulic flow restrictor valve.

Operation

The NV10-20 valve increases its orifice value from fully closed to fully open with counter-clockwise adjustment rotation.

Features

- Adjustments cannot be backed out of the valve.
- Desired settings may be locked down.
- Hardened parts for long life.
- Aluminum knob option.
- Positive shut-off.
- Linear adjustment.
- Industry-common cavity.

Ratings

Pressure Ratings

Pressure rating: 241 bar (3500 psi)

Proof pressure: 345 bar (5000 psi)

Burst pressure: 896 bar (13000 psi)

Flow Ratings

Flow rating: See pressure drop vs. Flow chart

Maximum internal leakage: 0.05 ml/min (1 drops/min)

Temperature Ratings

Operating fluid temperature: -40 to 100 °C (-40 to 212 °F) note: With buna N seals

-26 to 204 °C (-15 to 400 °F) note: With fluorocarbon seals

-54 to 107 °C (-65 to 225 °F) note: With polyurethane seals

-54 to 107 °C (-65 to 225 °F) note: With urethane seals

Storage temperature: -40 to 70 °C (-40 to 160 °F)

Ambient temperature: -40 to 70 °C (-40 to 160 °F)

Other Ratings

Corrosion protection: 960 hr salt spray per ASTM B117 (model number: GNV10-20x)

Operating Parameters

Fluids: Mineral based or synthetic hydraulic fluid with lubricating properties

Fluid viscosity range: 7.4 to 420 cSt

Maximum operating contamination level: 18/16/13 per iso4406

NEEDLE VALVE

Properties

Adjustment torque: 0.56 N-m (5 in-lb) note: At 7 bar (100 psi)
5.41 N-m (48 in-lb) note: At 207 bar (3000 psi)
Unit weight: 0.14 kg (0.30 lb)
Internal wetted surface area: 91 cm^2 (14.1 in^2)

Performance

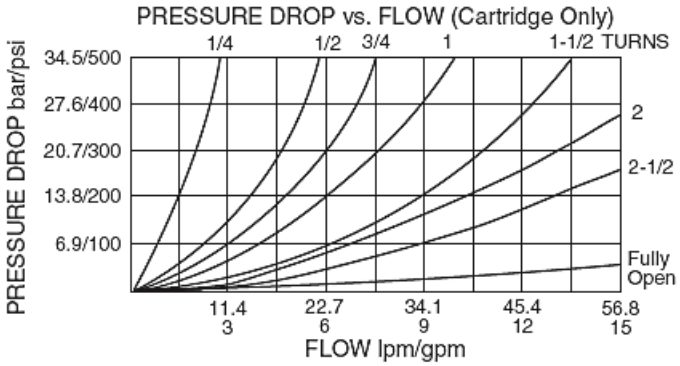

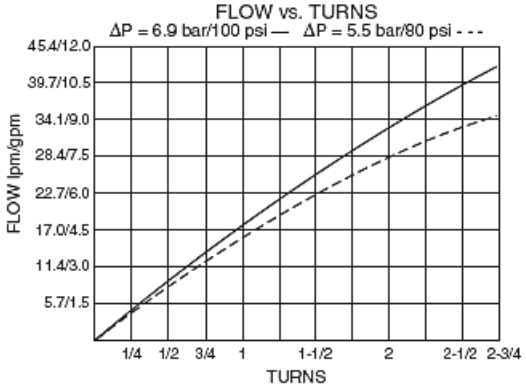

NEEDLE VALVE

Dimensions

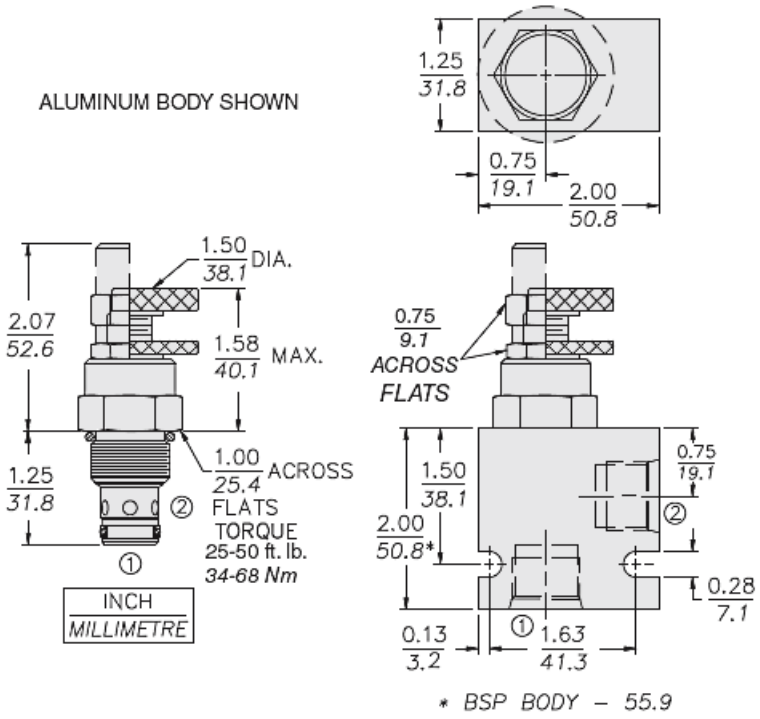

Installation Specifications

Cavity: VC10-2

10-size-2-way Cavities

Cartridge installation torque: 34 to 37 N-m (25 to 27 ft-lb)

Maximum allowable torque: 67.8 N-m (50 ft-lb)

Orientation restriction: None

Accessories

Seal kit: SK10-2X-M

Seal kit installation instructions

Housings: Available 10-2w valve bodies

NEEDLE VALVE

Order Code

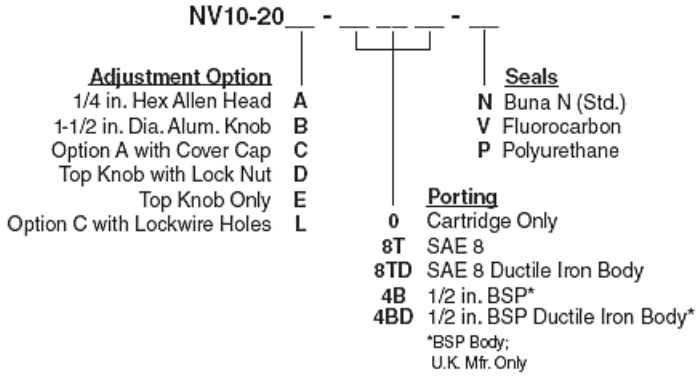

Model Options

NV10-20F-H-J

F Adjustment Option

CODE	DESCRIPTION
A	1/4" Hex Allen Head
B	1-1/2" Diameter Aluminum Knob with Aluminum Lock Knob
C	1/4" Hex Allen Head with Cover Cap
D	1-1/2" Diameter Aluminum Knob with Lock Nut
E	1-1/2" Diameter Aluminum Knob Only
L	1/4" Hex Allen Head with Cover Cap and Lockwire Holes

H Line Body

CODE	DESCRIPTION
0	No Body
6T	Aluminum SAE 6
8T	Aluminum SAE 8
6TD	Ductile Iron SAE 6
8TD	Ductile Iron SAE 8
2B	Aluminum BSPP 1/4" (2)
3B	Aluminum BSPP 3/8" (3)
4B	Aluminum BSPP 1/2" (4)
4BD	Ductile Iron BSPP 1/2" (4)

J Seal

CODE	DESCRIPTION
N	Buna-N
V	Fluorocarbon
P	Polyurethane
U	PPDI Urethane