PRESSURE REDUCING/ RELIEVING CARTRIDGE VALVE U.S. PATENT # 7,137,406

Overview

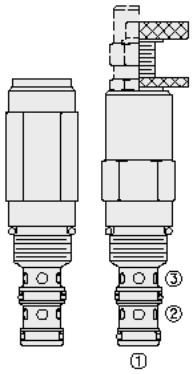

SYMBOL

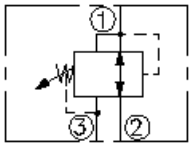

Description

The pr10-36xx is a spool type, pilot operated, hydraulic pressure reducing/ relieving valve with internal pilot and internal spring chamber drain, designed to act as a pressure regulating device for secondary circuits. Port 2 may be protected by 60 mesh, 250 micron rated screen with option s.

Operation

In its steady state, the pr10-36xx allows flow to pass bidirectionally from port 2 to port 1, with the spring chamber constantly drained at port 3. Upon attainment of a predetermined pressure at port 1, the spool shifts to restrict inlet flow from port 2, thereby regulating pressure at port 1. In this mode the valve will also relieve port 1 to port 3.

Features

- Adjustments cannot be backed out of the valve.
- Adjustments prohibit springs from going solid.
- Optional spring ranges to 207 bar (3000 psi).
- Hardened spool and cage for long life.
- Industry-common size.

Ratings

Pressure Ratings

Pressure rating: 241.3 bar (3500 psi) note: Port 1

241.3 bar (3500 psi) note: Port 2

68.9 bar (1000 psi) note: Port 3

Proof pressure: 517.1 bar (7500 psi)

Burst pressure: 1034 bar (15000 psi)

Flow Ratings

Flow rating: 56.8 lpm (15 gpm)

Maximum pilot flow: 0.170 lpm (0.045 gpm)

Temperature Ratings

Operating fluid temperature: -40 to 100 °C (-40 to 212 °F) note: With buna N seals

-26 to 204 °C (-15 to 400 °F) note: With fluorocarbon seals

-54 to 107 °C (-54 to 225 °F) note: With polyurethane seals

Storage temperature: -40 to 70 °C (-40 to 160 °F)

Ambient temperature: -40 to 70 °C (-40 to 160 °F)

Operating Parameters

Fluids: Mineral based or synthetic with lubricating properties

Fluid viscosity range: 7.4 to 420 cSt

Maximum operating contamination level: 18/16/13 per ISO 4406 (tank pressure is additive to regulated pressure)

Properties

Unit weight: 0.26 kg (0.57 lb) note: A

PRESSURE REDUCING/ RELIEVING CARTRIDGE VALVE U.S. PATENT # 7,137,406

0.28 kg (0.62 lb) note: B
0.30 kg (0.67 lb) note: C I
0.25 kg (0.55 lb) note: F h

Internal wetted surface area: 165 cm^2 (25.5 in^2) note: A b c I
179 cm^2 (25.7 in^2) note: F h

Performance

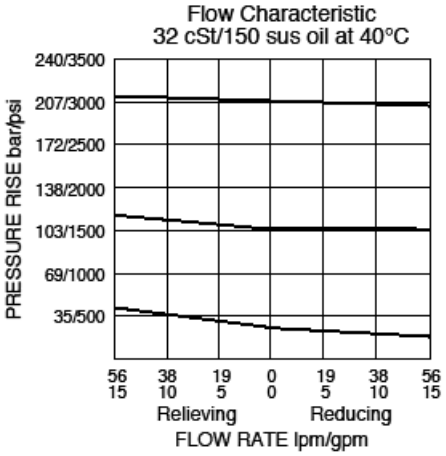

Dimensions

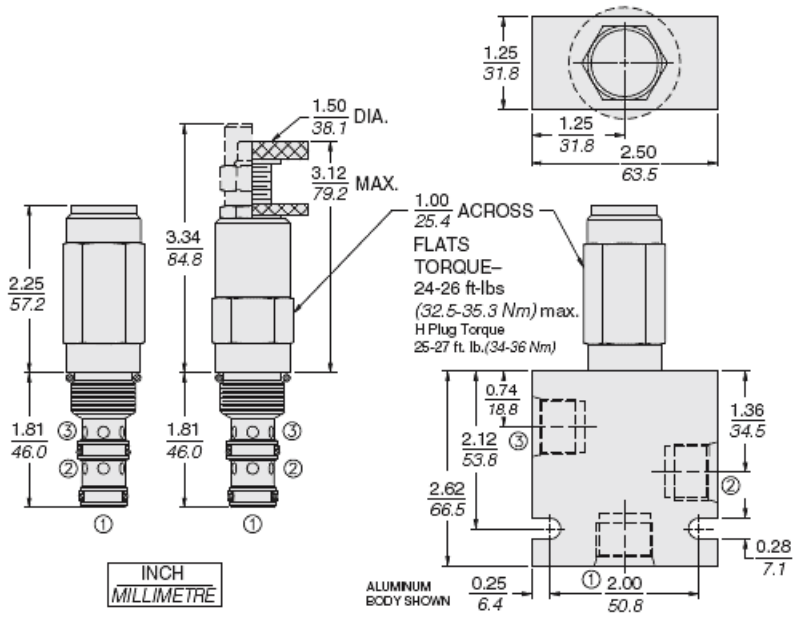

Installation Specifications

Cavity: VC10-3
10-size-3-way Cavities
Cartridge installation torque: 33.9 to 36.7 N-m (25 to 27 ft-lb)
67.8 N-m (50 ft-lb)

PRESSURE REDUCING/ RELIEVING CARTRIDGE VALVE U.S. PATENT # 7,137,406

H style plug torque: 33.9 N-m (25 ft-lb)
Orientation restriction: None

Accessories

Seal kit: SK10-3X-BM
Seal kit installation instructions
Housings: Available 10-3w valve bodies

Order Code

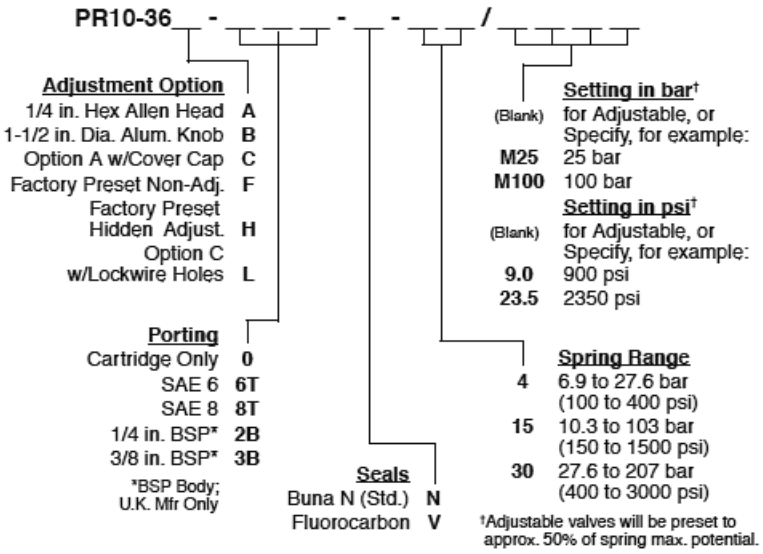

Model Options

PR10-36FG-H-J-R/S

F Adjustment Option

CODE	DESCRIPTION
A	1/4" Hex Allen Head
B	1-1/2" Diameter Aluminum Knob with Aluminum Lock Knob
C	1/4" Hex Allen Head with Cover Cap
F	Factory Preset Non-Adjustable
H	Factory Preset Hidden Adjustment
L	1/4" Hex Allen Head with Cover Cap and Lockwire Holes

G Screen

CODE	DESCRIPTION
BLANK	NONE
S	60 Mesh Screen

H Line Body

CODE	DESCRIPTION
0	No Body
6T	Aluminum SAE 6
8T	Aluminum SAE 8
6TD	Ductile Iron SAE 6
8TD	Ductile Iron SAE 8
3B	Aluminum BSPP 3/8" (3)
3BD	Ductile Iron BSPP 3/8" (3)

PRESSURE REDUCING/ RELIEVING CARTRIDGE VALVE U.S. PATENT # 7,137,406

J Seal

CODE	DESCRIPTION
N	Buna-N
V	Fluorocarbon
P	Polyurethane
U	PPDI Urethane

R Spring

CODE	DESCRIPTION
04	6.9 to 27.6 bar (100 to 400 psi) Spring Range
15	10.3 to 103.4 bar (150 to 1500 psi) Spring Range
30	27.6 to 206.8 bar (400 to 3000 psi) Spring Range

S Setting

CODE	DESCRIPTION
MXXX	Spring Setting in XXX bar
XX	Spring Setting in XX psi (x 100)