PRESSURE REDUCING/RELIEVING CARTRIDGE VALVE

Overview

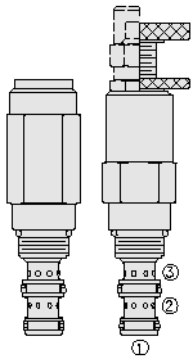

SYMBOL

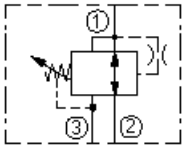

Description

The pr58-38xxx is a screw in, cartridge style, direct acting, spool type, hydraulic pressure reducing/relieving valve with internal spring chamber drain, and spool damping chamber.

Operation

It is designed to act as a pressure regulating device for secondary circuits. In its steady state, the pr58-38xxx allows flow to pass bidirectionally from port 2 to port 1 with the spring chamber constantly drained at port 3. Upon attainment of a predetermined pressure at port 1, the cartridge shifts to block flow at port 2, thereby regulating pressure at port 1. In this mode, the valve will also relieve port 1 to port 3.. Port 2 may be protected by a 60 x 60 mesh screen.

Features

- Adjustments cannot be backed out of the valve.
- Adjustments prohibit springs from going solid.
- Optional spring ranges to 248 bar (4200 psi)
- Optional 233 micron screen.
- Hardened spool and cage for long life.
- Compact, industry-common size.

Ratings

Pressure Ratings

Pressure rating: 344.7 bar (5000 psi)

68.9 bar (1000 psi) note: Maximum tank port pressure

Proof pressure: 379.2 bar (5500 psi)

Burst pressure: 896.3 bar (13000 psi)

Flow Ratings

Flow rating: 18.9 lpm (5 gpm)

Temperature Ratings

Operating fluid temperature: -40 to 100 °C (-40 to 212 °F) note: With buna N seals

-26 to 204 °C (-15 to 400 °F) note: With fluorocarbon seals

-54 to 107 °C (-65 to 225 °F) note: With polyurethane and urethane seals

Storage temperature: -40 to 70 °C (-40 to 160 °F)

Ambient temperature: -40 to 70 °C (-40 to 160 °F)

Operating Parameters

Fluids: Mineral based or synthetic with lubricating properties

Fluid viscosity range: 7.4 to 420 cSt

Maximum operating contamination level: 20/18/14 per ISO 4406 (tank port pressure is additive to pressure setting at ratio of 1:1)

Properties

Unit weight: 0.23 kg (0.52 lb) note: A

0.26 kg (0.57 lb) note: B

0.28 kg (0.61 lb) note: C l

PRESSURE REDUCING/RELIEVING CARTRIDGE VALVE

0.22 kg (0.49 lb) note: F h

Internal wetted surface area: 141 cm^2 (21.9 in^2) note: A b c l

166 cm^2 (25.7 in^2) note: F h

Performance

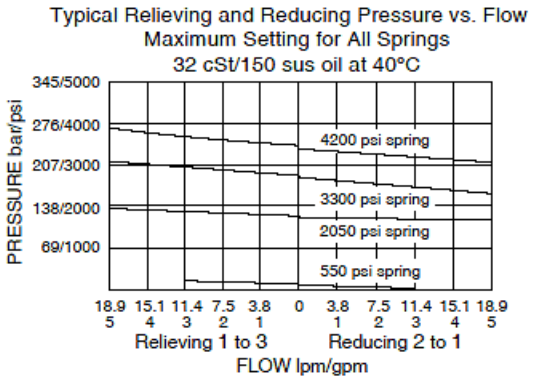

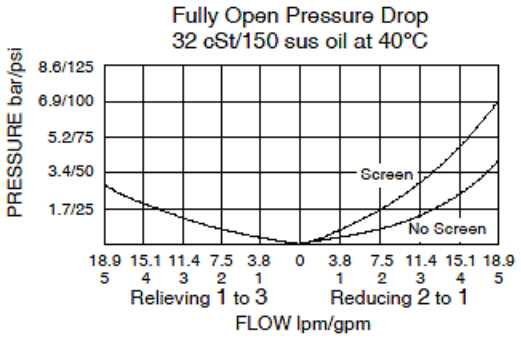

Dimensions

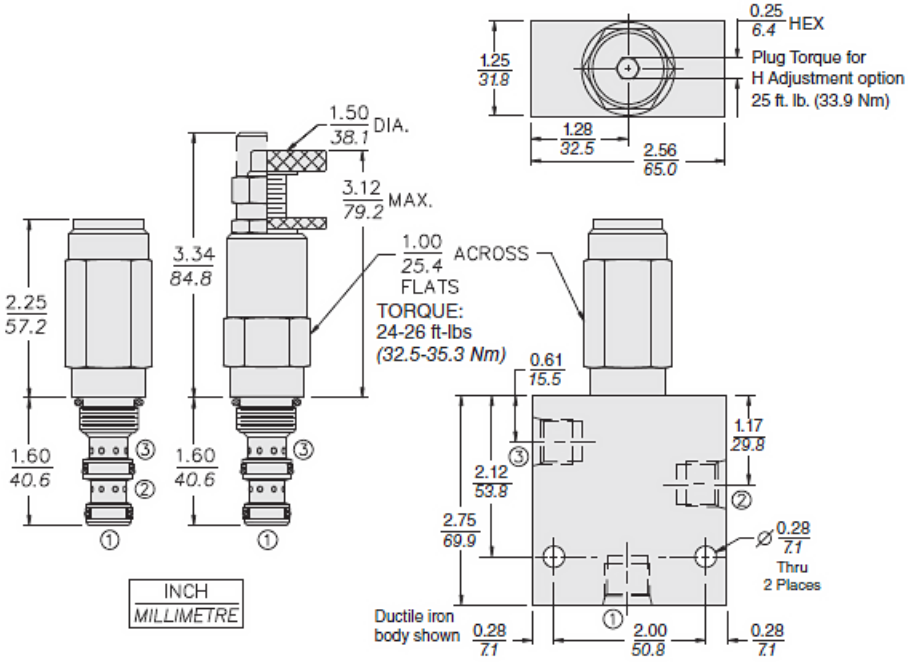

Installation Specifications

Cavity: VC08-3

08-size-3-way Cavities

Cartridge installation torque: 32.5 to 35.3 N-m (24 to 26 ft-lb)

47.5 N-m (35 ft-lb) note: Maximum

Plug torque: 47.5 N-m (25 ft-lb)

Orientation restriction: None

PRESSURE REDUCING/RELIEVING CARTRIDGE VALVE

Accessories

Seal kit: SK08-3X-BM note: X = seal option
SK08-3U-OO note: X = seal option
Seal kit installation instructions
Housings: Available 08-3w valve bodies

Order Code

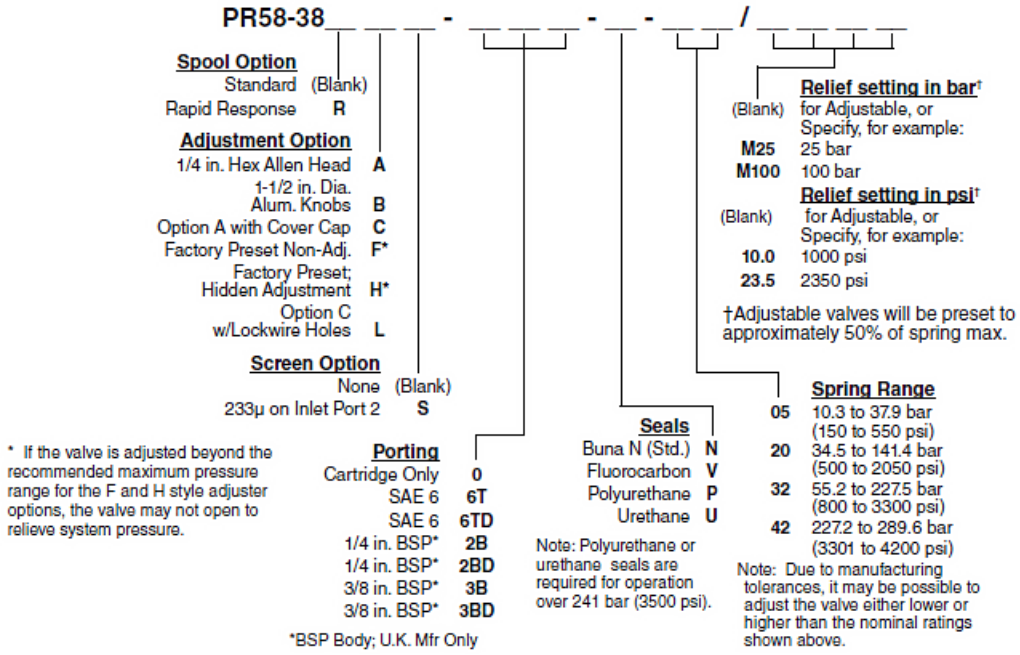

Model Options

PR58-38DFG-H-J-R/S

D Rapid Response Option

CODE	DESCRIPTION
BLANK	Standard
R	Rapid Response

F Adjustment Option

CODE	DESCRIPTION
A	1/4" Hex Allen Head
B	1-1/2" Diameter Aluminum Knob with Aluminum Lock Knob
C	1/4" Hex Allen Head with Cover Cap
F	Factory Preset Non-Adjustable
H	Factory Preset Hidden Adjustment
L	1/4" Hex Allen Head with Cover Cap and Lockwire Holes

G Screen

CODE	DESCRIPTION
BLANK	NONE
S	60 Mesh Screen

PRESSURE REDUCING/RELIEVING CARTRIDGE VALVE

H Line Body

CODE	DESCRIPTION
0	No Body
4T	Aluminum SAE 4
6T	Aluminum SAE 6
6TD	Ductile Iron SAE 6
8TD	Ductile Iron SAE 8
3B	Aluminum BSPP 3/8" (3)
3BD	Ductile Iron BSPP 3/8" (3)

J Seal

CODE	DESCRIPTION
N	Buna-N
V	Fluorocarbon
P	Polyurethane
U	PPDI Urethane

R Spring

CODE	DESCRIPTION
05	10.3 to 37.9 bar (150 to 550 psi) Spring Range
20	34.5 to 141.3 bar (500 to 2050 psi) Spring Range
32	55.2 to 227.5 bar (800 to 3300 psi) Spring Range
42	227.6 to 289.6 bar (3301 to 4200 psi) Spring Range

S Setting

CODE	DESCRIPTION
MXXX	Spring Setting in XXX bar
XX	Spring Setting in XX psi (x 100)