RE 18330-73/03.22
Replaces: RE 00199/07.10

Dual counterbalance, standard poppet type

Double common cavity

Cartridge style in manifold

VBSN-DE-C 2Y.02 - K - X - Y - Z - W

Dimensions

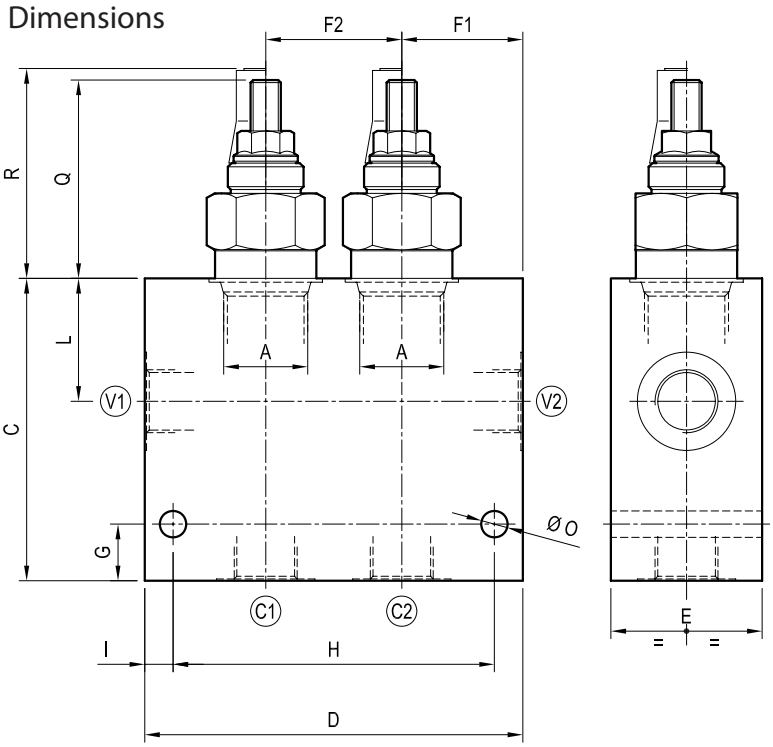

Technical data

Max flow:	up to 320 l/min	(85 gpm)
Max operating pressure for steel body:	350 bar	(5000 psi)
Max operating pressure for aluminium body:	210 bar	(3000 psi)

To order only manifold see data sheet RE 18325-85

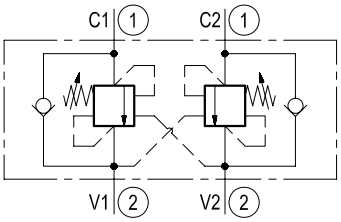

Table "Y"

Cavity A	Y	PORT SIZE V1-V2-C1-C2	Max Flow l/min (gpm)	DIMENSIONS mm (Inches) C	D	E	F1	F2	G	H	I	L	M	O	Q	R
SIZE 08	02	G 3/8	30 (8)	60 (2.36)	90 (3.54)	30 (1.18)	27 (1.06)	36 (1.42)	15 (0.59)	75 (2.95)	7.5 (0.3)	27.5 (1.08)		7 (0.28)	55 (2.17)	64 (2.52)
SIZE 10	02	G 3/8	60 (16)	80 (3.15)	100 (3.94)	40 (1.58)	32 (1.26)	36 (1.42)	15 (0.59)	85 (3.35)	7.5 (0.30)	32.5 (1.28)		7 (0.28)	53 (2.09)	59 (2.32)
	03	G 1/2		80 (3.15)	100 (3.94)	40 (1.58)	32 (1.26)	36 (1.42)	15 (0.59)	85 (3.35)	7.5 (0.30)	32.5 (1.28)		7 (0.28)		
SIZE 12	03	G 1/2	120 (32)	90 (3.54)	125 (4.92)	50 (1.97)	40 (1.58)	45 (1.77)	15 (0.59)	105 (4.13)	10 (0.39)	41.5 (1.63)		7 (0.28)	61 (2.4)	67 (2.64)
	04	G 3/4		90 (3.54)	125 (4.92)	50 (1.97)	40 (1.58)	45 (1.77)	15 (0.59)	105 (4.13)	10 (0.39)	41.5 (1.63)		7 (0.28)		
SIZE 16	05	G 1	200 (53)	90 (3.54)	145 (5.71)	50 (1.97)	45 (1.77)	55 (2.17)	22 (0.87)	125 (4.92)	10 (0.39)	38.5 (1.52)		9 (0.35)	73 (2.87)	80 (3.15)
SIZE 20	06	G 1 1/4	320 (85)	120 (4.72)	175 (6.89)	60 (2.36)	55 (2.17)	65 (2.56)	25 (0.98)	150 (5.91)	12.5 (0.49)	51 (2.01)		11 (0.43)	65 (2.56)	72.5 (2.85)

Cartridge style

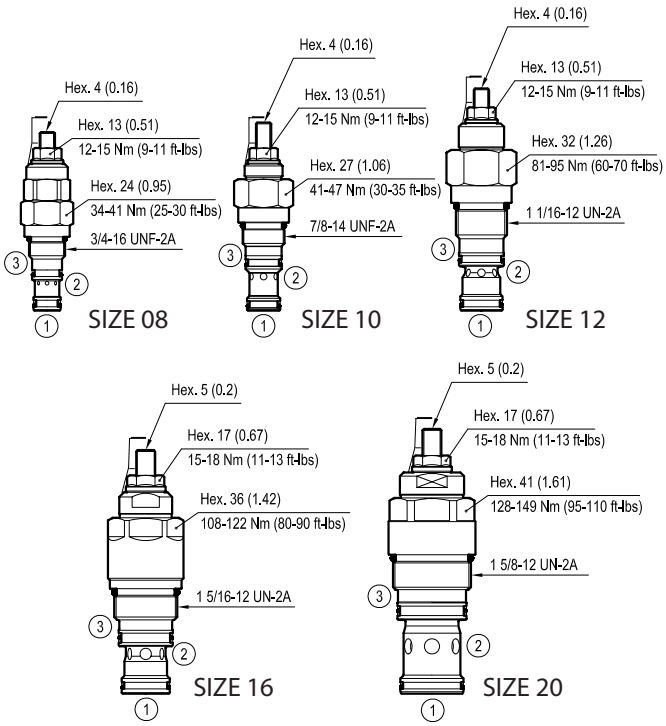

[mm (inches)]

Table "K"

			K				
CARTRIDGE CODE	04	52	20	X	56	Z	VBSN-08AA
	04	52	31	X	85	Z	VBSN-10A
	04	52	28	X	57	Z	VBSN-12A
	04	52	29	X	27	Z	VBSN-16A
	04	52	25	X	58	Z	VBSN-20A

Table "X"

X	PILOT RATIO	
03	4 : 1	3:1 only for K=31 version
10	8 : 1	
33	4 : 1	With sealed pilot (only for K=20 version)

OPTIONS	
Ordering code	
K=20,31,28	11.04.23.002
K=29,25	11.04.23.004

CARTRIDGE TECHNICAL DATA
Common cavity: CA-08A-3C / CA-10A-3C / CA-12A-3C / CA-16A-3C / CA-20A-3C For other details see data sheet RE 18320-01, RE 18320-02, RE 18320-03, RE 18320-04 and RE 18320-05

Table "Z"

Z		SPRINGS														
		SIZE 08			SIZE 10			SIZE 12			SIZE 16			SIZE 20		
		Adj. press. range bar(psi)	Pres. increase bar/turn (psi/turn)	Std. setting 5 l/min bar (psi)	Adj. press. range bar(psi)	Pres. increase bar/turn (psi/turn)	Std. setting 5 l/min bar (psi)	Adj. press. range bar(psi)	Pres. increase bar/turn (psi/turn)	Std. setting 5 l/min bar (psi)	Adj. press. range bar(psi)	Pres. increase bar/turn (psi/turn)	Std. setting 5 l/min bar (psi)	Adj. press. range bar(psi)	Pres. increase bar/turn (psi/turn)	Std. setting 5 l/min bar (psi)
X=03	15	70-150 (1000-2200)	72.5 (1051)	150 (2200)												
	20	100-210 (1450-3000)	109 (1581)	200 (2900)	70-210 (1000-3000)	135 (1958)	200 (2900)	70-210 (1000-3000)	50 (725)	200 (2900)	70-210 (1000-3000)	70 (1015)	200 (2900)	70-210 (1000-3000)	70 (1015)	200 (2900)
	35	200-350 (2900-5000)	137 (1987)	350 (5000)	140-350 (2000-5000)	196 (2842)	350 (5000)	140-350 (2000-5000)	159 (2306)	350 (5000)	140-350 (2000-5000)	108 (1566)	350 (5000)	140-350 (2000-5000)	108 (1566)	350 (5000)
X=10	20				70-210 (1000-3000)	52 (754)	200 (2900)	70-210 (1000-3000)	42 (609)	200 (2900)	70-210 (1000-3000)	39 (566)	200 (2900)	70-210 (1000-3000)	70 (1015)	200 (2900)
	35				140-350 (2000-5000)	89 (1291)	350 (5000)	140-350 (2000-5000)	67 (972)	350 (5000)						
	40										140-420 (2000-6000)	135 (15958)	350 (5000)	140-420 (2000-6000)	135 (15958)	350 (5000)
X=33																
	20	100-210 (1450-3000)	109 (1581)	200 (2900)												

Performance graphs

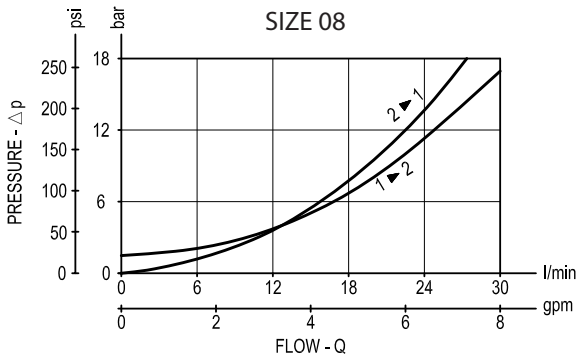

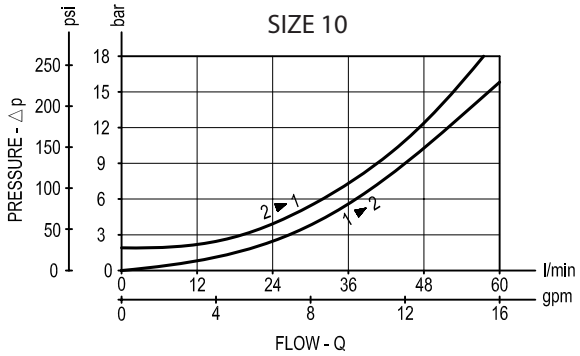

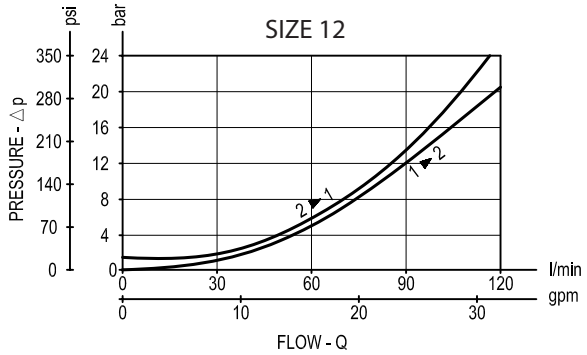

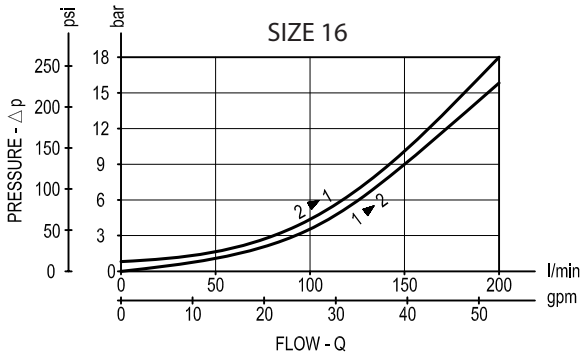

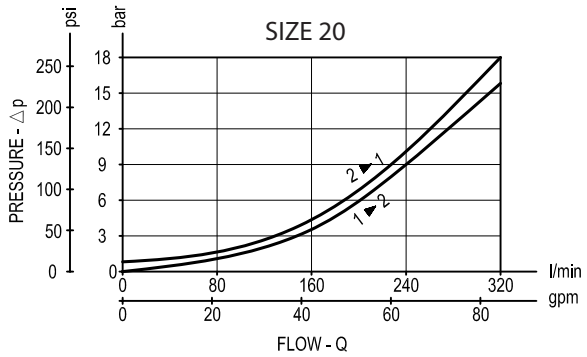

Ordering code

2Y.02	K	X	Y	Z	W

Manifold with dual counterbalance, standard poppet type

Cartridge style - Common cavity (see table K on page 2)

Cartridge style - Pilot ratio (see table X on page 2)

Manifold style - Dimensions and port sizes (see table Y on page 1)

Settings - Springs (see table Z on page 2)

Manifold material

= 00	Aluminium manifold
= S0	Steel manifold

Preferred types (readily available)

Type	Material number
2Y022003022 0S0	R934001415
2Y022003023 5S0	R934001416
2Y023103032 0S0	R934001426
2Y023103033 5S0	R934001428
2Y022803042 0S0	R934001432
2Y022903052 0S0	R934001436
2Y022903053 5S0	R934003341
2Y022503062 0S0	R934001439
2Y022503063 5S0	R934003340
2Y022003022000	R934000653
2Y022510064 0S0	R934003365
2Y022803032000	R934000656
2Y022803042000	R934000658
2Y022810043 5S0	R934003490

Type	Material number
2Y022910054 0S0	R934000807
2Y023103022000	R934000726
2Y023103032000	R934000725
2Y023110033 5S0	R934003491

Further types available by request

Bosch Rexroth Oil Control S.p.A.
Via Leonardo da Vinci 5
P.O. Box no. 5
41015 Nonantola – Modena, Italy
Tel. +39 059 887 611
Fax +39 059 547 848
integrated-circuits@oilcontrol.com
www.boschrexroth.com

© This document, as well as the data, specifications and other information set forth in it, are the exclusive property of Bosch Rexroth Oil Control S.p.a.. It may not be reproduced or given to third parties without its consent.

The data specified above only serve to describe the product. No statements concerning a certain condition or suitability for a certain application can be derived from our information. The information given does not release the user from the obligation of own judgment and verification. It must be remembered that our products are subject to a natural process of wear and aging.

Subject to change.