PROPORTIONAL VALVE 2 WAY, NORMALLY CLOSED

Overview

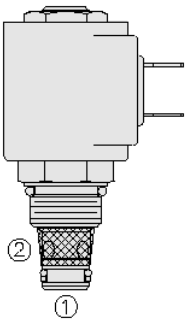

SYMBOL

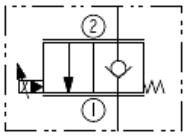

Description

A solenoid-operated, 2 port, normally closed, poppet-type, proportional, screw-in hydraulic cartridge valve, designed for low leakage blocking and load-holding applications.

Operation

When de-energized, the SP08-20X acts as a check valve, allowing flow from 1 to 2, while blocking flow from 2 to 1. When energized, the poppet lifts to open the 2 to 1 flow path.

Features

- Continuous-duty rated coil.
- Efficient wet-armature construction.
- Manual override options.
- Optional waterproof E-Coils rated up to IP69K.
- Industry common cavity.
- Compact size.

Ratings

Pressure Ratings

Pressure rating: 207 bar (3000 psi)

Proof pressure: 413 bar (6000 psi)

Burst pressure: 827 bar (12000 psi)

Flow Ratings

Maximum internal leakage: 5 drops/min

Temperature Ratings

Operating fluid temperature: -40 to 100 °C (-40 to 212 °F) note: With buna N seals

-26 to 204 °C (-15 to 400 °F) note: With fluorocarbon seals

-54 to 107 °C (-65 to 225 °F) note: With polyurethane seals

Storage temperature: -40 to 70 °C (-40 to 160 °F)

Ambient temperature: -40 to 90 °C (-40 to 194 °F)

Operating Parameters

Fluids: Mineral based or synthetic hydraulic fluid with lubricating properties

Fluid viscosity range: 7.4 to 420 cSt

Filtration requirements: ISO 4406 16/13

Properties

Materials: Steel with hardened work surfaces zinc-plated exposed surfaces

Unit weight: 0.10 kg (0.23 lb)

0.10 kg (0.94 lb) note: Including coil

Internal wetted surface area: 85.2 cm^2 (13.2 in^2)

PROPORTIONAL VALVE 2 WAY, NORMALLY CLOSED

Electrical Parameters

Minimum operating PWM dither frequency: 70 Hz

Performance

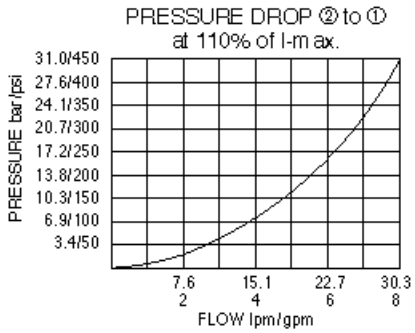

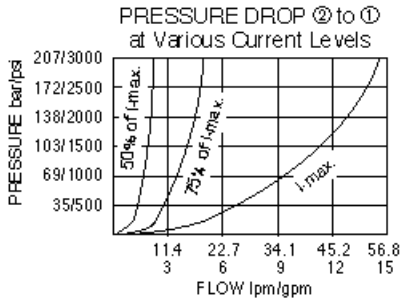

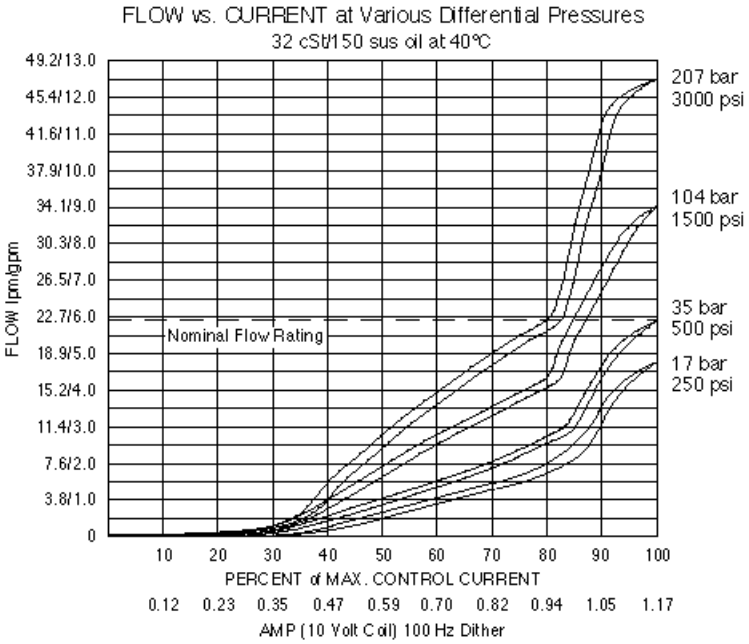

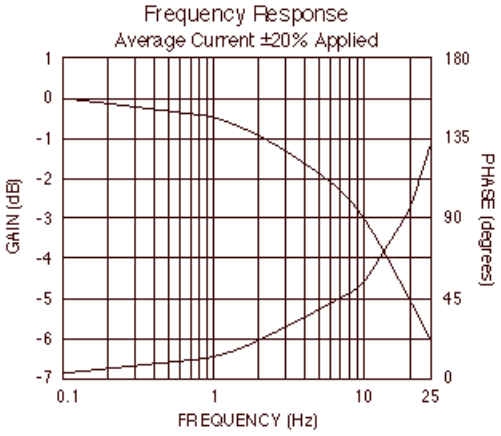

PROPORTIONAL VALVE 2 WAY, NORMALLY CLOSED

Dimensions

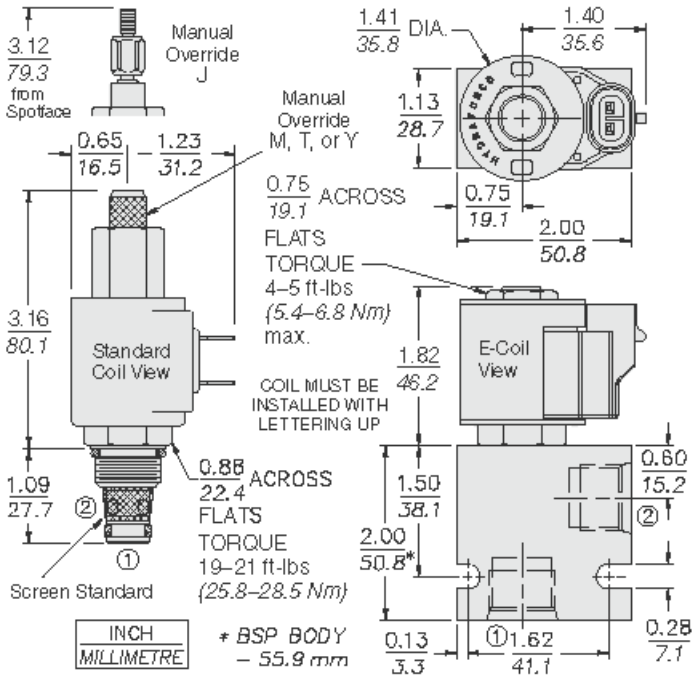

Installation Specifications

Cavity: VC08-2

08-size-2-way Cavities

Cartridge installation torque: 25.8 to 28.5 N-m (19 to 21 ft-lb)

Maximum allowable torque: 54 N-m (40 ft-lb)

Coil nut torque: 5.4 to 6.8 N-m (4.5 ft-lb)

Orientation restriction: None

Accessories

Seal kit: SK08-2X-T

Seal kit installation instructions

Housings: Available 08-2w valve bodies

Coils: 08 size D coils; 08 size E coils

PROPORTIONAL VALVE 2 WAY, NORMALLY CLOSED

Order Code

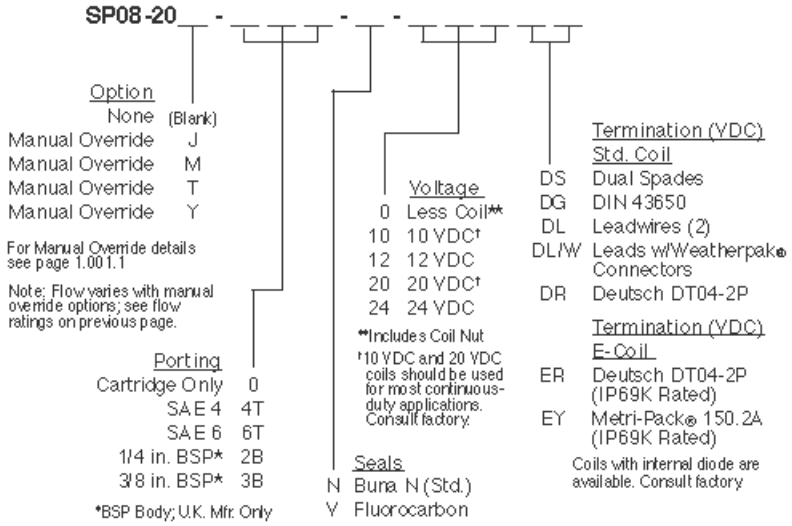

Model Options

SP08-20E-H-J-L

E Manual Override

CODE	DESCRIPTION
BLANK	NONE
J	Momentary Pull Override, #10-32 threads
M	Two Position Override, Red Knurled Knob
T	Variable Position Override, Red Knurled Knob
Y	Momentary Pull Override, Red Knurled Knob

H Line Body

CODE	DESCRIPTION
0	No Body
4T	Aluminum SAE 4
6T	Aluminum SAE 6
8T	Aluminum SAE 8
6TD	Ductile Iron SAE 6
8TD	Ductile Iron SAE 8
2B	Aluminum BSPP 1/4" (2)
3B	Aluminum BSPP 3/8" (3)
3BD	Ductile Iron BSPP 3/8" (3)

J Seal

CODE	DESCRIPTION
N	Buna-N
V	Fluorocarbon
P	Polyurethane
U	PPDI Urethane

L Coil

CODE	DESCRIPTION
0	No Coil
10DL	10 VDC, D-Coil, Dual Lead Wires
10DS	10 VDC, D-Coil, Dual Spade
10EL	10 VDC, E-Coil, Dual Lead Wires, 18 inches long
10EL/36	10 VDC, E-Coil, Dual Lead Wires, 36 inches long
10ER	10 VDC, E-Coil, Deutsch

PROPORTIONAL VALVE 2 WAY, NORMALLY CLOSED

CODE	DESCRIPTION
12DG	12 VDC, D-Coil, DIN 43650
12DL	12 VDC, D-Coil, Dual Lead Wires, 18 inches long
12DL/36	12 VDC, D-Coil, Dual Lead Wires, 36 inches long
12DL/W	12 VDC, D-Coil, Dual Lead Wires with Weatherpak
12DR	12 VDC, D-Coil, Deutsch
12DS	12 VDC, D-Coil, Dual Spade
12EG	12 VDC, E-Coil, DIN 43650
12EJ	12 VDC, E-Coil, AMP Jr.
12EL	12 VDC, E-Coil, Dual Lead Wires, 18 inches long
12EL/36	12 VDC, E-Coil, Dual Lead Wires, 36 inches long
12ER	12 VDC, E-Coil, Deutsch
12EY	12 VDC, E-Coil, Metri-Pack 150
20DG	20 VDC, D-Coil, DIN 43650
20DS	20 VDC, D-Coil, Dual Spade
20ER	20 VDC, E-Coil, Deutsch
24AG	24 VDC, D-Coil, DIN 43650
24AP	24 VDC, D-Coil, 1/2" Conduit and Dual Lead Wires
24DG	24 VDC, D-Coil, DIN 43650
24DL	24 VDC, D-Coil, Dual Lead Wires, 18 inches long
24DL/36	24 VDC, D-Coil, Dual Lead Wires, 36 inches long
24DL/W	24 VDC, D-Coil, Dual Lead Wires with Weatherpak
24DR	24 VDC, D-Coil, Deutsch
24DS	24 VDC, D-Coil, Dual Spade
24EG	24 VDC, E-Coil, DIN 43650
24EJ	24 VDC, E-Coil, AMP Jr.
24ER	24 VDC, E-Coil, Deutsch
24EY	24 VDC, E-Coil, Metri-Pack 150
36DG	36 VDC, D-Coil, DIN 43650
36DS	36 VDC, D-Coil, Dual Spade