SOLENOID CARTRIDGE VALVE BI-DIRECTOINAL, NORMALLY CLOSED

Overview

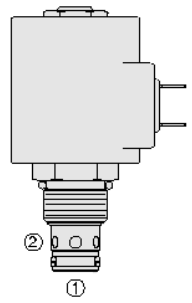

SYMBOL

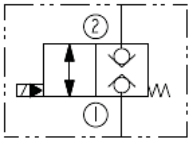

Description

A solenoid-operated, 2 way, normally closed, bi-directional, screw-in hydraulic cartridge valve, designed to function as a load holding or blocking valve in applications requiring low internal leakage bi-directionally.

Features

- Continuous-duty rated coil.
- Hardened seat for long life and low leakage.
- Optional coil voltages and terminations.
- Cartridges are voltage interchangeable.
- Manual override option.
- Optional waterproof E-Coils rated up to IP69K.
- Industry common cavity.

Ratings

Pressure Ratings

Pressure rating: 241 bar (3500 psi)

Minimum differential pressure required: 2.8 bar (20 psid)

Flow Ratings

Reseat flow: 2.8 lpm (0.75 gpm)

Maximum internal leakage: 5 drops/min

Temperature Ratings

Operating fluid temperature: -40 to 100 °C (-40 to 212 °F) note: With buna N seals

-26 to 204 °C (-15 to 400 °F) note: With fluorocarbon seals

-54 to 107 °C (-65 to 225 °F) note: With polyurethane seals

Storage temperature: -40 to 70 °C (-40 to 160 °F)

Ambient temperature: -40 to 70 °C (-40 to 160 °F)

Other Ratings

Corrosion protection: 960 hr salt spray per ASTM b117 (gsv10-28xx)

Operating Parameters

Fluids: Mineral based or synthetic hydraulic fluid with lubricating properties

Fluid viscosity range: 7.4 to 420 cSt

Maximum operating contamination level: 20/18/14 per ISO 4406

Properties

Unit weight: 0.15 kg (0.34 lb)

Internal wetted surface area: 129 cm^2 (20.0 in^2)

SOLENOID CARTRIDGE VALVE BI-DIRECTOINAL, NORMALLY CLOSED

Performance

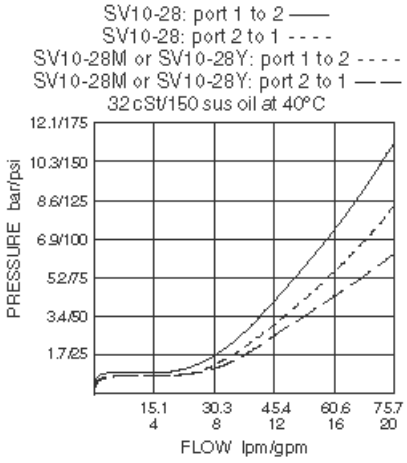

Dimensions

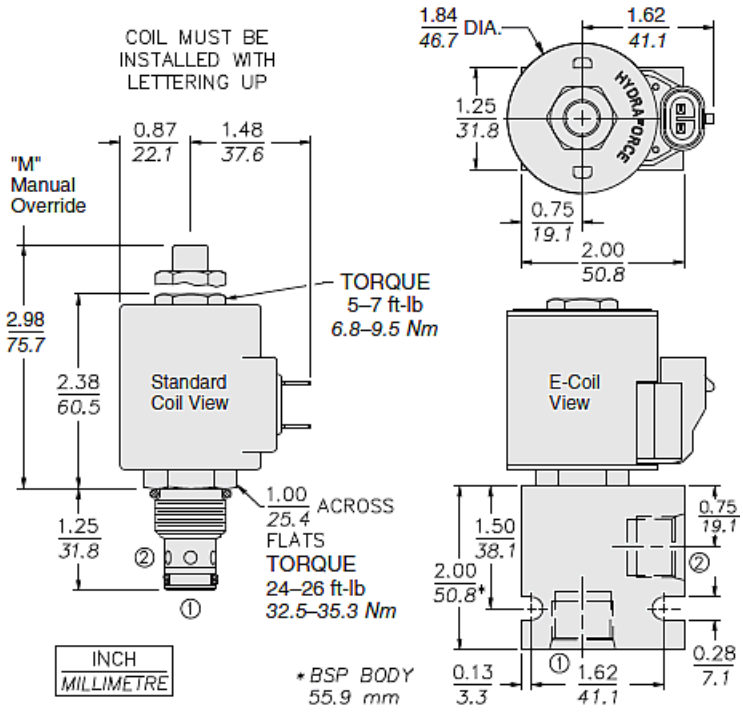

Installation Specifications

Cavity: VC10-2

10-size-2-way Cavities

Cartridge installation torque: 32.5 to 35.3 N-m (24 to 26 ft-lb)

66.7 N-m (50 ft-lb) note: Maximum

Coil nut torque: 6.8 to 9.5 N-m (5 to 7 ft-lb)

Orientation restriction: None

SOLENOID CARTRIDGE VALVE BI-DIRECTOINAL, NORMALLY CLOSED

Accessories

Seal kit: SK10-2X-M

Seal kit installation instructions

Housings: Available 10-2w valve bodies

Coils: 10 size D coils; 10 size E coils

Order Code

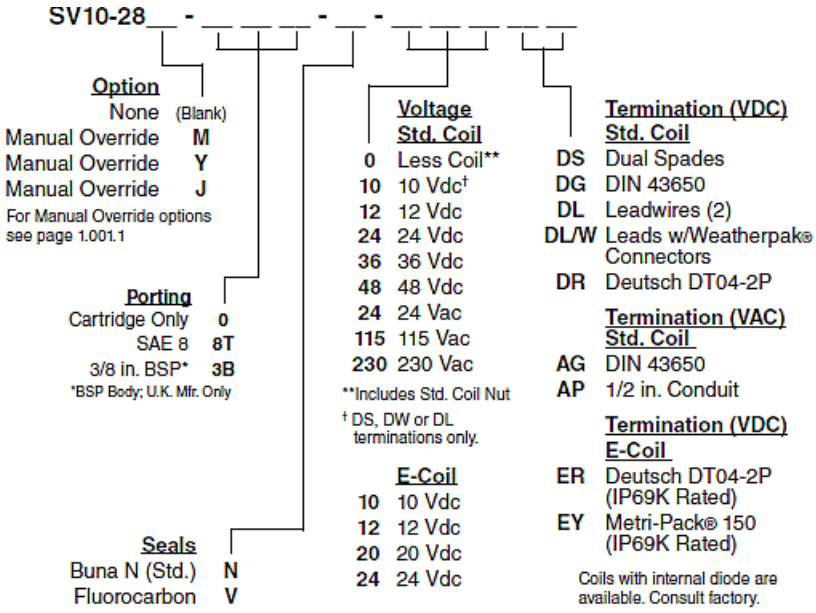

Model Options

SV10-28EG-H-J-L

E Manual Override

CODE	DESCRIPTION
BLANK	NONE
J	Momentary Pull Override, #10-32 threads
M	Two Position Override, Red Knurled Knob
Y	Momentary Pull Override, Red Knurled Knob

G Screen

CODE	DESCRIPTION
BLANK	NONE
S	100 Mesh Screen

H Line Body

CODE	DESCRIPTION
0	No Body
6T	Aluminum SAE 6
8T	Aluminum SAE 8
6TD	Ductile Iron SAE 6
8TD	Ductile Iron SAE 8
2B	Aluminum BSPP 1/4" (2)
3B	Aluminum BSPP 3/8" (3)
4B	Aluminum BSPP 1/2" (4)
4BD	Ductile Iron BSPP 1/2" (4)

SOLENOID CARTRIDGE VALVE BI-DIRECTOINAL, NORMALLY CLOSED

J Seal

CODE	DESCRIPTION
N	Buna-N
V	Fluorocarbon
P	Polyurethane
U	PPDI Urethane

L Coil

CODE	DESCRIPTION
0	No Coil
10DG	10 VDC, D-Coil, DIN 43650
10DL	10 VDC, D-Coil, Dual Lead Wires
10DR/D	10 VDC, D-Coil, Deutsch with Diode
10DS	10 VDC, D-Coil, Dual Spade
10EL	10 VDC, E-Coil, Dual Lead Wires
10ER	10 VDC, E-Coil, Deutsch
10ER/Z	10 VDC, E-Coil, Deutsch with Zener Diode
12DG	12 VDC, D-Coil, DIN 43650
12DL	12 VDC, D-Coil, Dual Lead Wires, 18 inches long
12DL/36	12 VDC, D-Coil, Dual Lead Wires, 36 inches long
12DL/W	12 VDC, D-Coil, Dual Lead Wires with Weatherpak
12DL/W/D	12 VDC, D-Coil, Dual Lead Wires with Weatherpak with Diode
12DR	12 VDC, D-Coil, Deutsch
12DR/D	12 VDC, D-Coil, Deutsch with Diode
12DR/Z	12 VDC, D-Coil, Deutsch with Zener Diode
12DS	12 VDC, D-Coil, Dual Spade
12EG	12 VDC, E-Coil, DIN 43650
12EJ	12 VDC, E-Coil, AMP Jr.
12EL	12 VDC, E-Coil, Dual Lead Wires, 18 inches long
12EL/36	12 VDC, E-Coil, Dual Lead Wires, 36 inches long
12EL/W/Z	12 VDC, E-Coil, Dual Lead Wires with WeatherPak and Zener Diode
12EL/Z	12 VDC, E-Coil, Dual Lead Wires with Zener Diode
12ER	12 VDC, E-Coil, Deutsch
12ER/Z	12 VDC, E-Coil, Deutsch with Zener Diode
12EY	12 VDC, E-Coil, Metri-Pack 150
12EY/Z	12 VDC, E-Coil, Metri-Pack 150 with Zener Diode
20DR/D	20 VDC, D-Coil, Deutsch with Diode
20DS	20 VDC, D-Coil, Dual Spade
20ER	20 VDC, E-Coil, Deutsch
24AG	24 VDC, D-Coil, DIN 43650
24AP	24 VDC, D-Coil, 1/2" Conduit and Dual Lead Wires
24DG	24 VDC, D-Coil, DIN 43650
24DL	24 VDC, D-Coil, Dual Lead Wires
24DL/W	24 VDC, D-Coil, Dual Lead Wires with Weatherpak
24DL/W/D	24 VDC, D-Coil, Dual Lead Wires with Weatherpak with Diode
24DP	24 VDC, D-Coil, 1/2" Conduit and Dual Lead Wires
24DR	24 VDC, D-Coil, Deutsch

SOLENOID CARTRIDGE VALVE BI-DIRECTOINAL, NORMALLY CLOSED

CODE	DESCRIPTION
24DR/D	24 VDC, D-Coil, Deutsch with Diode
24DS	24 VDC, D-Coil, Dual Spade
24EG	24 VDC, E-Coil, DIN 43650
24EJ	24 VDC, E-Coil, AMP Jr.
24EL	24 VDC, E-Coil, Dual Lead Wires, 18 inches long
24EL/36	24 VDC, E-Coil, Dual Lead Wires, 36 inches long
24EL/W/Z	24 VDC, E-Coil, Dual Lead Wires with WeatherPak and Zener Diode
24ER	24 VDC, E-Coil, Deutsch
24ER/Z	24 VDC, E-Coil, Deutsch with Zener Diode
24EY	24 VDC, E-Coil, Metri-Pack 150
24EY/Z	24 VDC, E-Coil, Metri-Pack 150 with Zener Diode
36DS	36 VDC, D-Coil, Dual Spade
115AG	115 VAC, D-Coil, DIN 43650
115AP	115 VAC, D-Coil, 1/2" Conduit and Dual Lead Wires
230AG	230 VAC, D-Coil, DIN 43650
230AP	230 VAC, D-Coil, 1/2" Conduit and Dual Lead Wires