PRESSURE REDUCING/RELIEVING PROPORTIONAL VALVE U.S. PATENT # 7,137,406

Overview

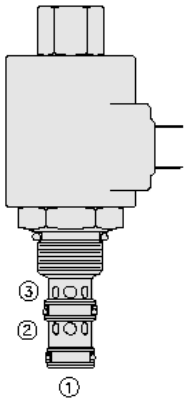

SYMBOL

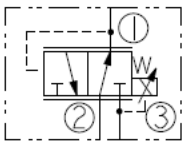

Description

The TS10-36X is a screw-in, cartridge style, pilot-operated, spool-type, proportional pressure reducing/relieving valve which CAN be infinitely adjusted across a prescribed range using a variable electric input. The regulated pressure is proportional to the input electrical current.

Operation

With current applied to the valve coil,the TS10-36XX allows flow from port 2 to port 1 until sufficient pressure is present at port 1 to open the pilot section by offsetting the electrically induced solenoid force. Upon reaching the predetermined pressure at port 1, the valve shifts to restrict inlet flow at port 2, thereby regulating pressure at port 1. in this mode, the valve also relieves port 1 to port 3. With no current applied, the valve will relieve at approximately 100 psi [6,9].

Features

- 12 and 24 volt coils standard.
- Optional waterproof E-Coils rated up to IP69K.
- Industry common cavity.
- Optional manual override.

Ratings

Pressure Ratings

Pressure rating: 241.3 bar (3500 psi) note: Ports 1, 2

68.9 bar (1000 psi) note: Port 3

Proof pressure: 249.9 bar (3625 psi)

Burst pressure: 758.4 bar (11000 psi)

Adjustable pressure range: 6.9 to 206.8 bar (100 to 3000 psi) note: Model-code A

6.9 to 158.6 bar (100 to 2300 psi) note: Model code B

6.9 to 117.2 bar (100 to 1700 psi) note: Model code C

Flow Ratings

Flow rating: 56.8 lpm (15 gpm)

Maximum pilot flow: 0.02 lpm (0.08 gpm)

Other Ratings

Cycle life: Less than 5% performance degradation over 1 million cycles (based on simulated test at 37.8 lpm (10 gpm) flow and maximum pressure setting.

Corrosion protection: 960 hr salt spray per ASTM b117

Temperature Ratings

Operating fluid temperature: -40 to 100 °C (-40 to 212 °F) note: With buna N seals

-26 to 204 °C (-15 to 400 °F) note: With fluorocarbon seals

-54 to 107 °C (-65 to 225 °F) note: With polyurethane seals

Storage temperature: -40 to 70 °C (-40 to 160 °F)

Ambient temperature: -40 to 70 °C (-40 to 160 °F)

Operating Parameters

Fluids: Mineral based or synthetic with lubricating properties

PRESSURE REDUCING/RELIEVING PROPORTIONAL VALVE U.S. PATENT # 7,137,406

Fluid viscosity range: 7.4 to 420 cSt

Maximum operating contamination level: 18/16/13 per ISO 4406 (tank pressure is additive to regulated pressure)

Properties

Unit weight: 0.21 kg (0.47 lb)

Internal wetted surface area: 192 cm^2 (29.8 in^2) note: TS10-36X
198 cm^2 (30.7 in^2) note: TS10-36XM

Electrical Parameters

Recommended PWM frequency: 200 Hz

	12 V D coil	24 V D coil	12 V E coil	24 V E coil
Maximum control current	1.10 A	0.55 A	141 mH	626 mH
Valve inductance	141 mH	626 mH	139 mH	600 mH

Performance

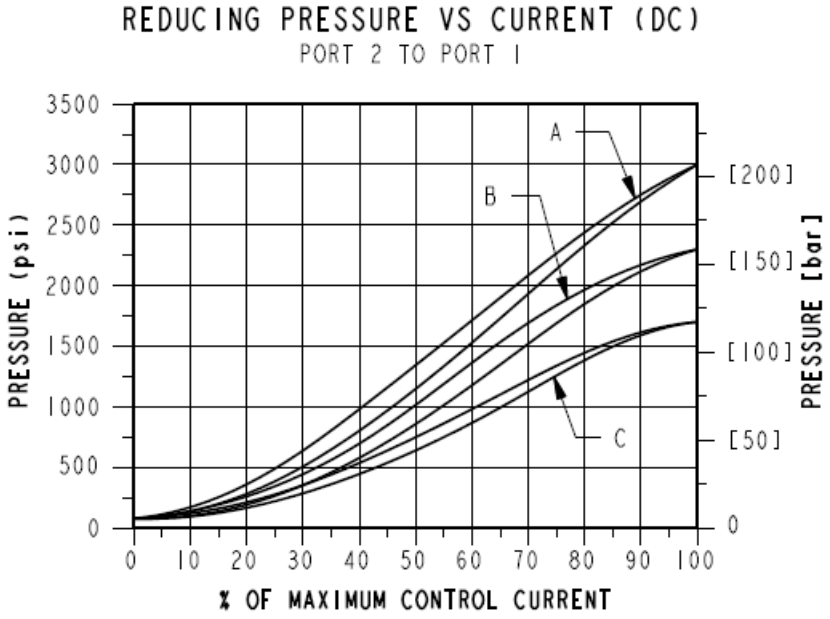

PRESSURE REDUCING/RELIEVING PROPORTIONAL VALVE U.S. PATENT # 7,137,406

TYPICAL RELIEVING / REDUCING PRESSURE VS FLOW @ MAXIMUM CURRENT

CARTRIDGE IN BODY SHOWN FOR TS10-36A, B AND C

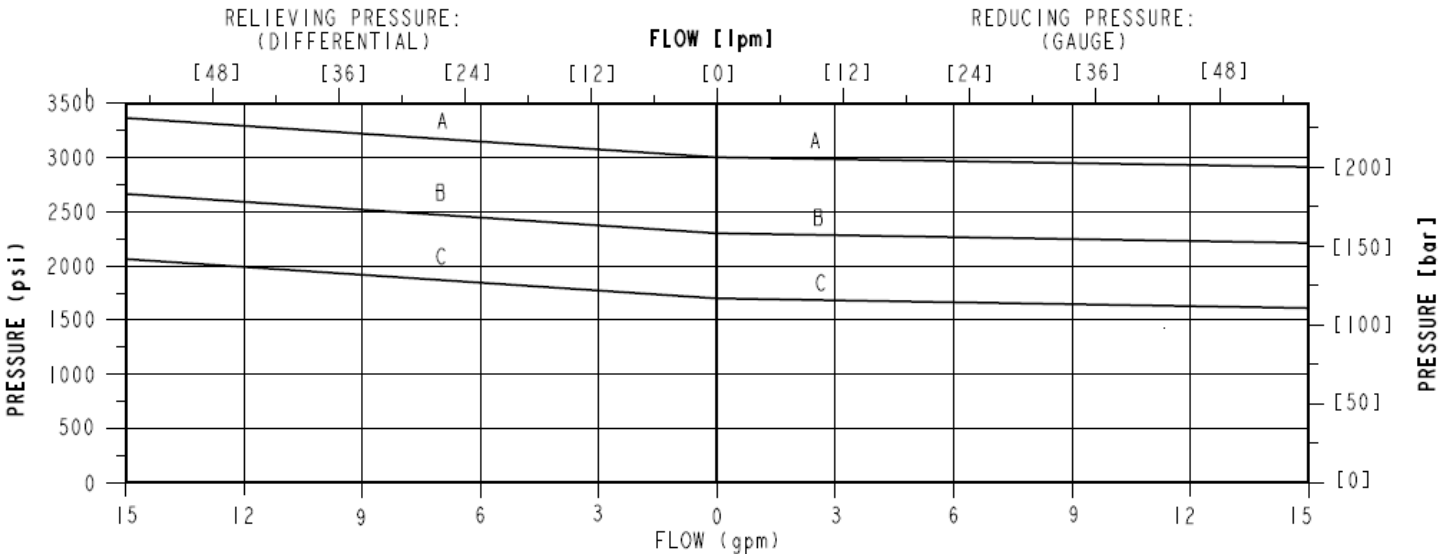

TYPICAL PRESSURE DROP VS FLOW

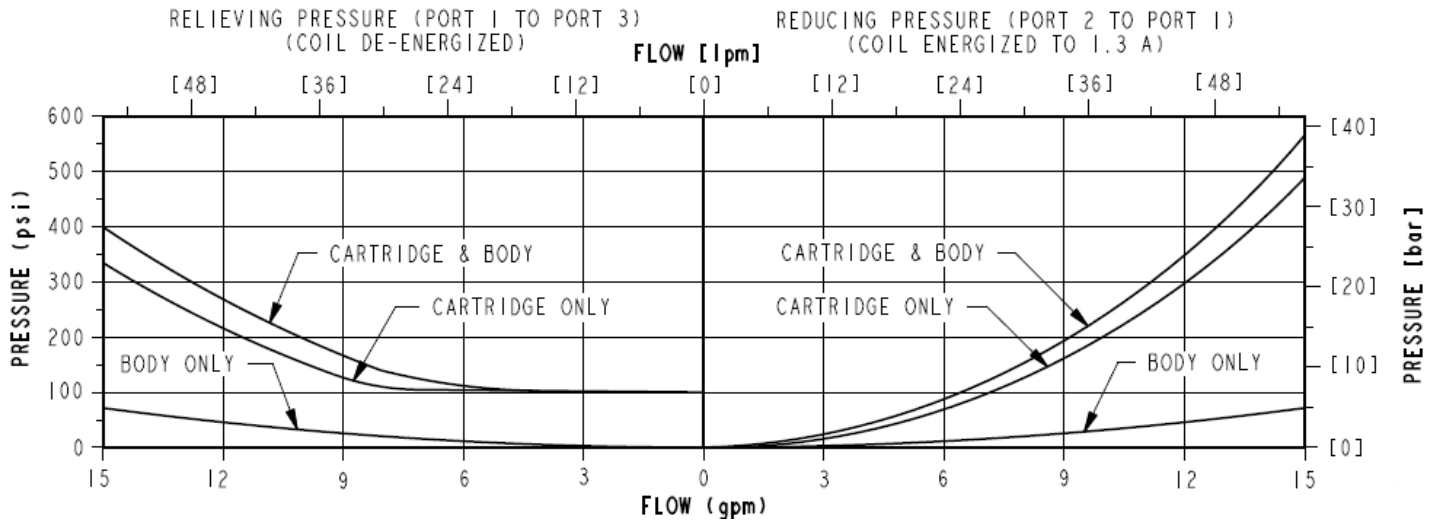

PRESSURE REDUCING/RELIEVING PROPORTIONAL VALVE U.S. PATENT # 7,137,406

Dimensions

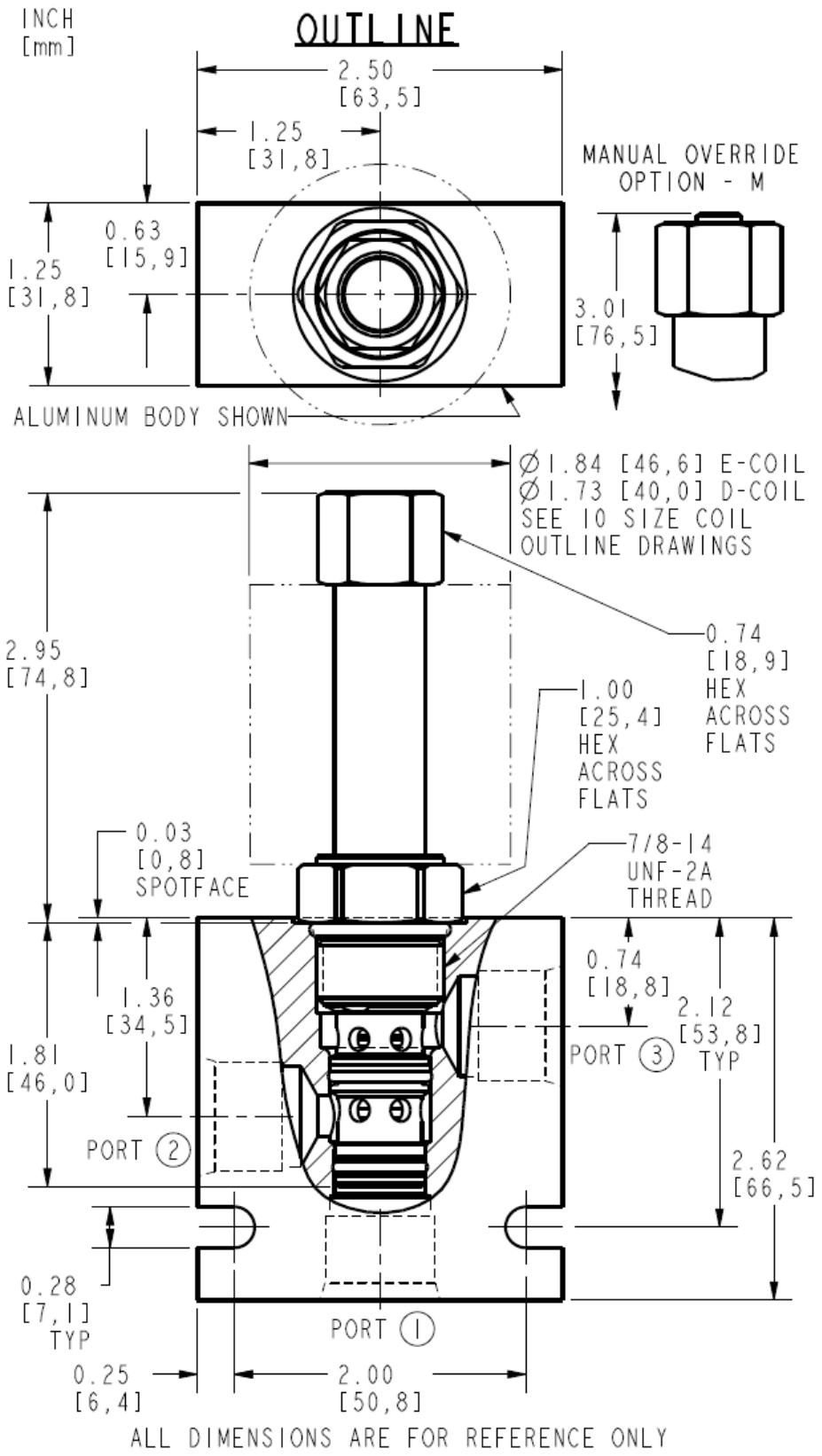

PRESSURE REDUCING/RELIEVING PROPORTIONAL VALVE U.S. PATENT # 7,137,406

Installation Specifications

Cavity: VC10-3
10-size-3-way Cavities
Cartridge installation torque: 32.5 to 35.3 N-m (24 to 26 ft-lb)
Coil nut torque: 9.5 to 13.6 N-m (7 to 10 ft-lb)
Orientation restriction: None

Accessories

Seal kit: SK10-3X-BM SK10-3U-OO
Seal kit installation instructions
Housings: Available 10-3w valve bodies
Coils: 10 size D coils; 10 size E coils

Order Code

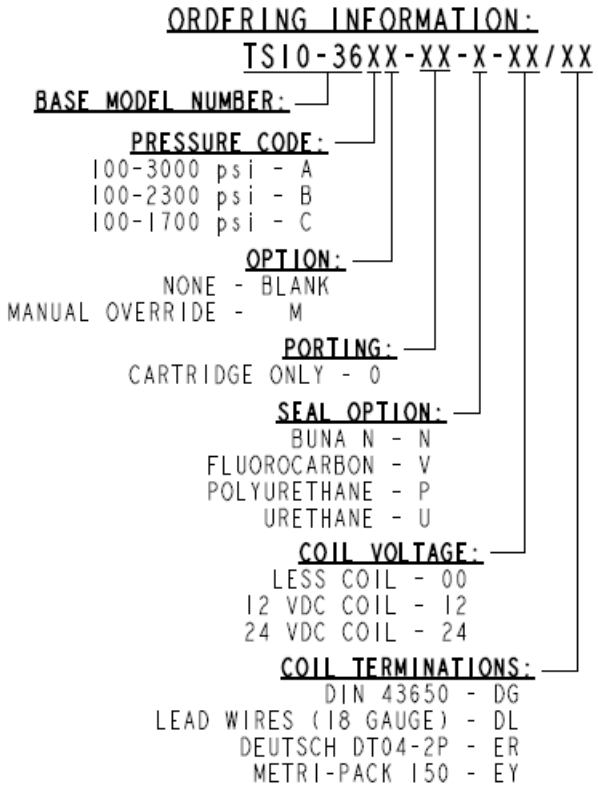

Model Options

TS10-36DE-H-J-L

D Regulating Pressure Range

CODE	DESCRIPTION
A	6.9 to 206.8 bar (100 to 3000 psi) Pressure Range
B	6.9 to 158.6 bar (100 to 2300 psi) Pressure Range
C	6.9 to 117.2 bar (100 to 1700 psi) Pressure Range

PRESSURE REDUCING/RELIEVING PROPORTIONAL VALVE U.S. PATENT # 7,137,406

E Manual Override

CODE	DESCRIPTION
BLANK	NONE
M	Minimum Regulated Pressure Override, 3/16" Internal Hex

H Line Body

CODE	DESCRIPTION
0	No Body
6T	Aluminum SAE 6
8T	Aluminum SAE 8
6TD	Ductile Iron SAE 6
8TD	Ductile Iron SAE 8
3B	Aluminum BSPP 3/8" (3)
3BD	Ductile Iron BSPP 3/8" (3)

J Seal

CODE	DESCRIPTION
N	Buna-N
V	Fluorocarbon
P	Polyurethane
U	PPDI Urethane

L Coil

CODE	DESCRIPTION
0	No Coil
10DG	10 VDC, D-Coil, DIN 43650
10DL	10 VDC, D-Coil, Dual Lead Wires
10DS	10 VDC, D-Coil, Dual Spade
10EL	10 VDC, E-Coil, Dual Lead Wires
10ER	10 VDC, E-Coil, Deutsch
12DG	12 VDC, D-Coil, DIN 43650
12DL	12 VDC, D-Coil, Dual Lead Wires, 18 inches long
12DL/36	12 VDC, D-Coil, Dual Lead Wires, 36 inches long
12DL/W	12 VDC, D-Coil, Dual Lead Wires with Weatherpak
12DR	12 VDC, D-Coil, Deutsch
12DS	12 VDC, D-Coil, Dual Spade
12EG	12 VDC, E-Coil, DIN 43650
12EJ	12 VDC, E-Coil, AMP Jr.
12EL	12 VDC, E-Coil, Dual Lead Wires, 18 inches long
12EL/36	12 VDC, E-Coil, Dual Lead Wires, 36 inches long
12ER	12 VDC, E-Coil, Deutsch
12EY	12 VDC, E-Coil, Metri-Pack 150
20DS	20 VDC, D-Coil, Dual Spade
20ER	20 VDC, E-Coil, Deutsch
24AG	24 VDC, D-Coil, DIN 43650
24AP	24 VDC, D-Coil, 1/2" Conduit and Dual Lead Wires
24DG	24 VDC, D-Coil, DIN 43650
24DL	24 VDC, D-Coil, Dual Lead Wires
24DL/W	24 VDC, D-Coil, Dual Lead Wires with Weatherpak
24DP	24 VDC, D-Coil, 1/2" Conduit and Dual Lead Wires
24DR	24 VDC, D-Coil, Deutsch
24DS	24 VDC, D-Coil, Dual Spade

PRESSURE REDUCING/RELIEVING PROPORTIONAL VALVE U.S. PATENT # 7,137,406

CODE	DESCRIPTION
24EG	24 VDC, E-Coil, DIN 43650
24EJ	24 VDC, E-Coil, AMP Jr.
24EL	24 VDC, E-Coil, Dual Lead Wires, 18 inches long
24EL/36	24 VDC, E-Coil, Dual Lead Wires, 36 inches long
24ER	24 VDC, E-Coil, Deutsch
24EY	24 VDC, E-Coil, Metri-Pack 150
36DS	36 VDC, D-Coil, Dual Spade