PRESSURE UNLOADING VALVE

Overview

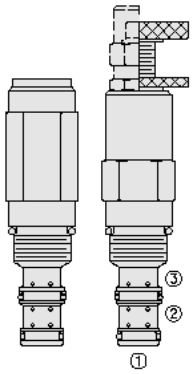

SYMBOL

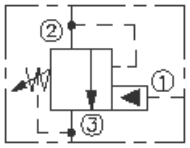

Description

The UP10-31 is a screw in, cartridge style, remote sequence, pilot unloading valve, with optional fixed unload/reload pressure ratios of 60%, 70% or 80% for use in accumulator type hydraulic systems.

Operation

In its steady state, the UP10-31 blocks flow from port 2 to port 3. On attainment of a predetermined pressure at port 1, the spool shifts to allow flow from port 2 to port 3. Since the spring chamber is vented at port 3, back pressure at port 3 will directly (1:1) effect the valve setting. If pressure at port 1 drops to a level below the ratio established reload value, the valve will close, blocking flow from port 2 to port 3.

Features

- Adjustments cannot be backed out of the valve.
- Adjustments prohibit springs from going solid.
- Optional spring ranges to 207 bar (3000 psi).
- Hardened spool and cage for long life.
- Industry-common size.

Ratings

Pressure Ratings

Pressure rating: 207 bar (3000 psi) note: Port 2, port 3

250 bar (3625 psi) note: Port 1

Loading and unloading pressure ratio: At

1 gpm

3000 psi

Pressure setting: 69 to 207 bar (1000 to 3000 psi)

Flow Ratings

Flow rating: 3.8 lpm (1 gpm)

Maximum internal leakage: 0.1 ml/min (2 drops/min)

Temperature Ratings

Operating fluid temperature: -40 to 100 °C (-40 to 212 °F) note: With buna N seals

-26 to 204 °C (-15 to 400 °F) note: With fluorocarbon seals

Storage temperature: -40 to 70 °C (-40 to 160 °F)

Ambient temperature: -40 to 70 °C (-40 to 160 °F)

Operating Parameters

Fluids: Mineral based or synthetic hydraulic fluid with lubricating properties

Fluid viscosity range: 7.4 to 420 cSt

Maximum operating contamination level: 20/18/14 per ISO 4406

Properties

Unit weight: 0.27 kg (0.58 lb) note: A

0.29 kg (0.64 lb) note: B

PRESSURE UNLOADING VALVE

0.31 kg (0.68 lb) note: C
0.26 kg (0.57 lb) note: F
0.26 kg (0.56 lb) note: H
0.31 kg (0.68 lb) note: L
Internal wetted surface area: 166 cm^2 (25.8 in^2) note: A b c l
187 cm^2 (28.9 in^2) note: F h

Performance

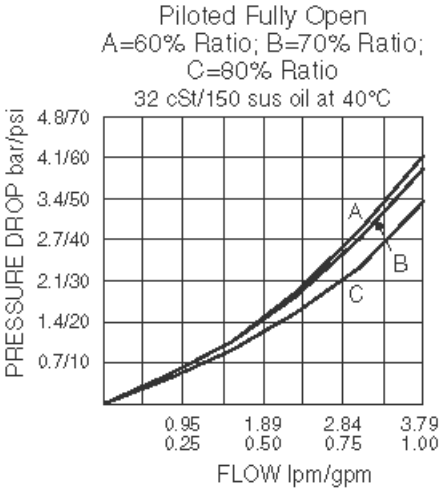

Dimensions

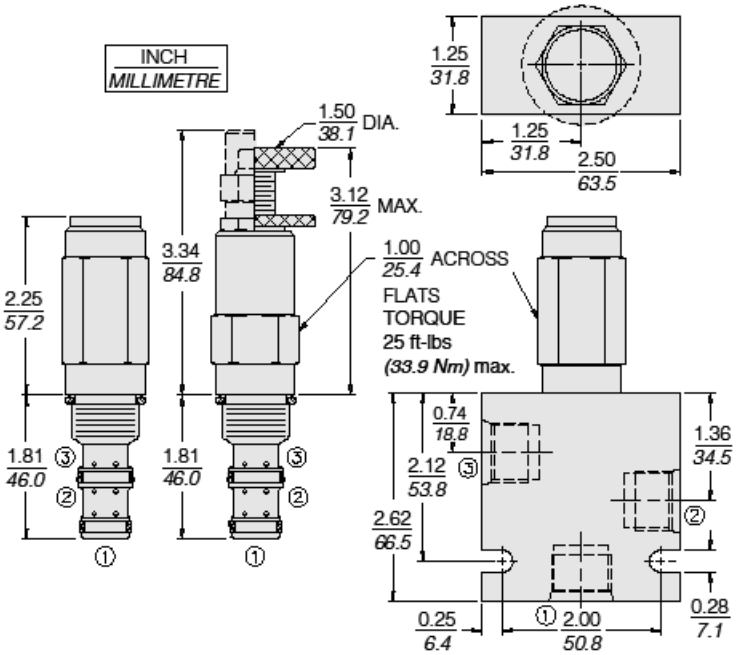

Installation Specifications

Cavity: VC10-3

PRESSURE UNLOADING VALVE

10-size-3-way Cavities
Cartridge installation torque: 34 to 37 N-m (25 to 27 ft-lb)
Plug torque: 34 to 37 N-m (25 to 27 ft-lb)
Orientation restriction: None

Accessories

Seal kit: SK10-3X-BM
Seal kit installation instructions
Housings: Available 10-3w valve bodies

Order Code

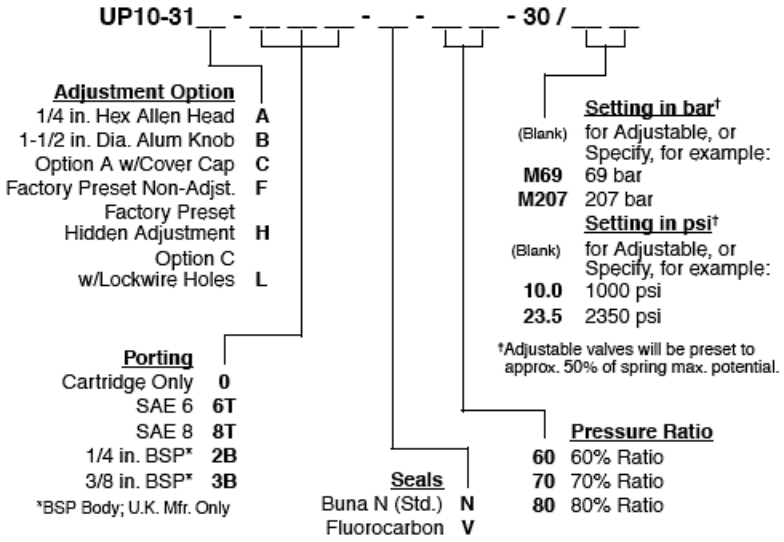

Model Options

UP10-31F-H-J-NR/S

F Adjustment Option

CODE	DESCRIPTION
A	1/4" Hex Allen Head
B	1-1/2" Diameter Aluminum Knob with Aluminum Lock Knob
C	1/4" Hex Allen Head with Cover Cap
F	Factory Preset Non-Adjustable
H	Factory Preset Hidden Adjustment
L	1/4" Hex Allen Head with Cover Cap and Lockwire Holes

H Line Body

CODE	DESCRIPTION
0	No Body
6T	Aluminum SAE 6
8T	Aluminum SAE 8
6TD	Ductile Iron SAE 6
8TD	Ductile Iron SAE 8
3B	Aluminum BSPP 3/8" (3)
3BD	Ductile Iron BSPP 3/8" (3)

PRESSURE UNLOADING VALVE

J Seal

CODE	DESCRIPTION
N	Buna-N
V	Fluorocarbon
P	Polyurethane
U	PPDI Urethane

N Ratio

CODE	DESCRIPTION
60	60% Ratio
70	70% Ratio
80	80% Ratio

R Spring

CODE	DESCRIPTION
30	68.9 to 206.8 bar (1000 to 3000 psi) Spring Range

S Setting

CODE	DESCRIPTION
MXXX	Spring Setting in XXX bar
XX	Spring Setting in XX psi (x 100)